WALL SCONCE LAMP

ASSEMBLY MANUAL

PARTS LISTS

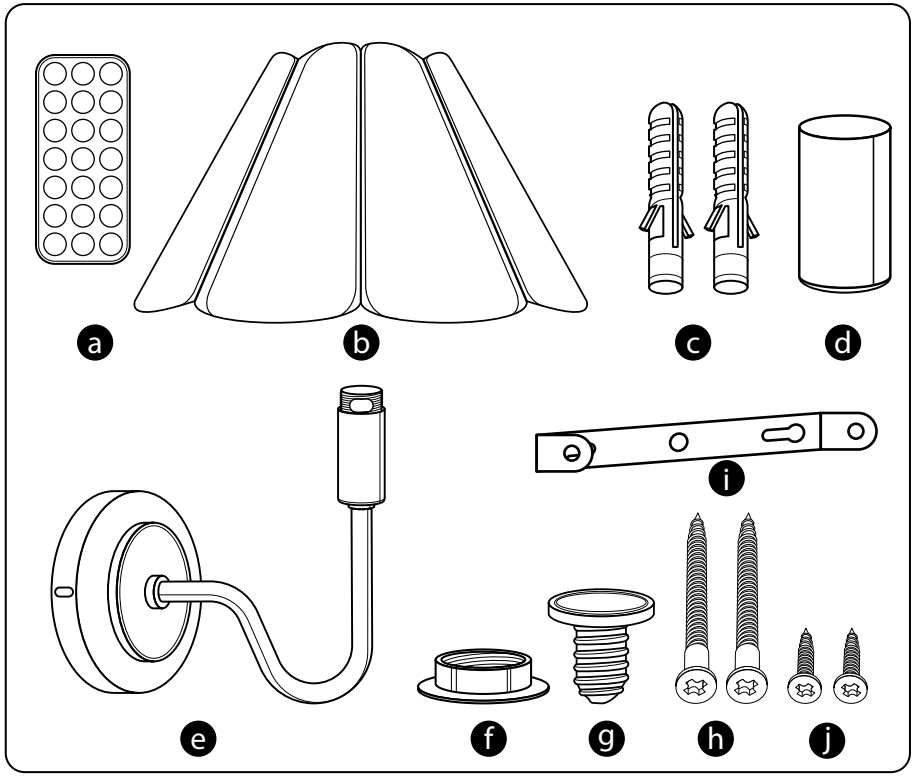

TOOLS REQUIRED

- Electric drill
- Drill bit suitable for wall type
- Screwdriver
- Spirit level
- Pencil

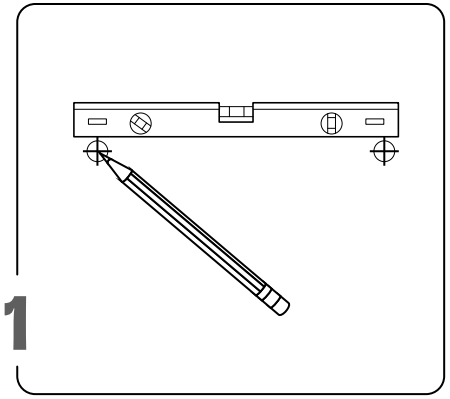

Step 1: Hold the lamp base against the wall. Use a spirit level to ensure it is straight, then mark the mounting hole positions with a pencil.

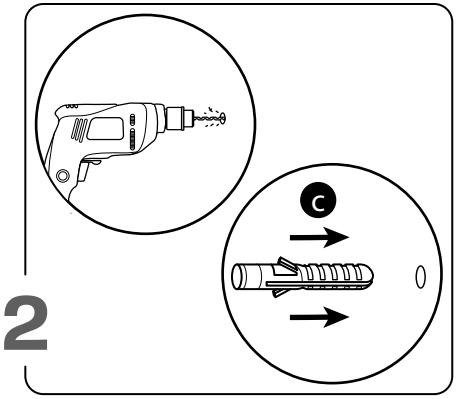

Drill holes at the marked positions using a drill bit suitable for your wall type. Insert the wall plugs fully into the drilled holes until they sit flush with the wall surface.

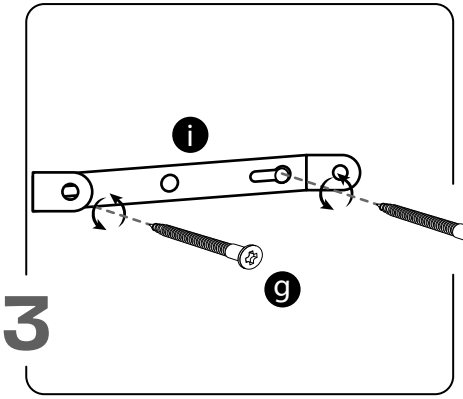

Align the lamp support with the wall plugs and secure it firmly using the provided screws.

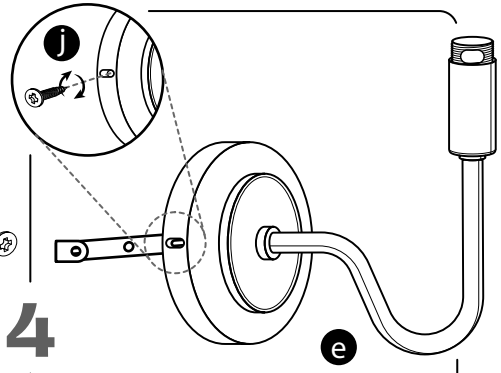

Position the lamp base onto the support arm and fasten it using the supplied screws. Do not over tighten.

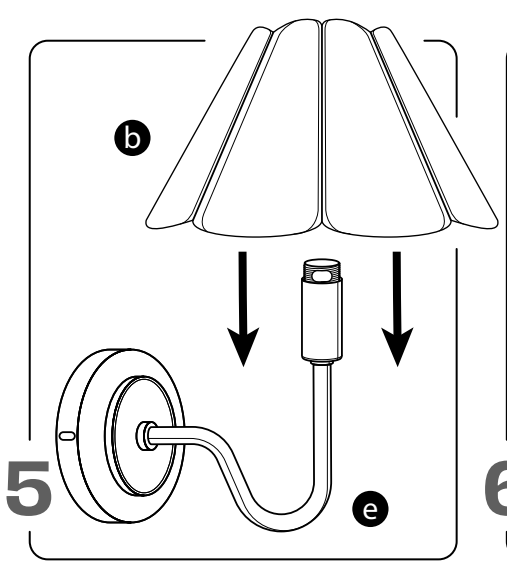

Place the lamp shade onto the base and ensure it is properly seated.

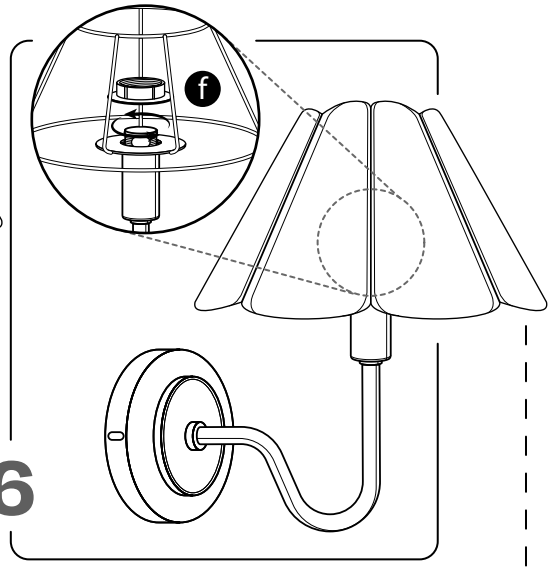

Tighten the lock nut by hand to hold the lamp shade securely in place.

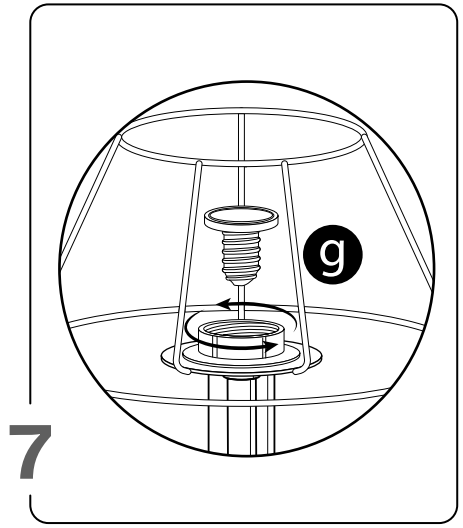

Insert the bulb holder and fit a compatible bulb.

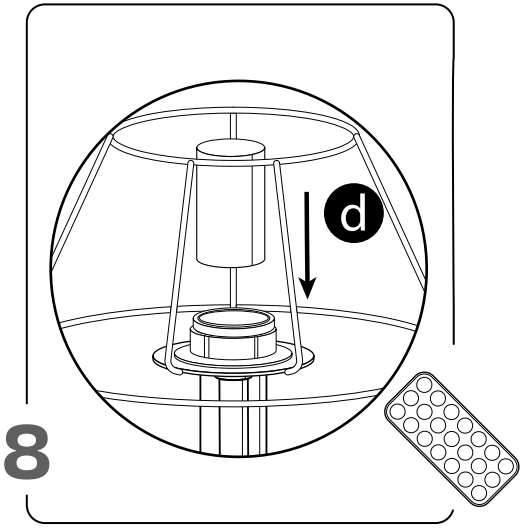

Insert the remote control bulb into the bulb holder. Restore the power supply, then use the remote to switch the lamp on and confirm correct operation

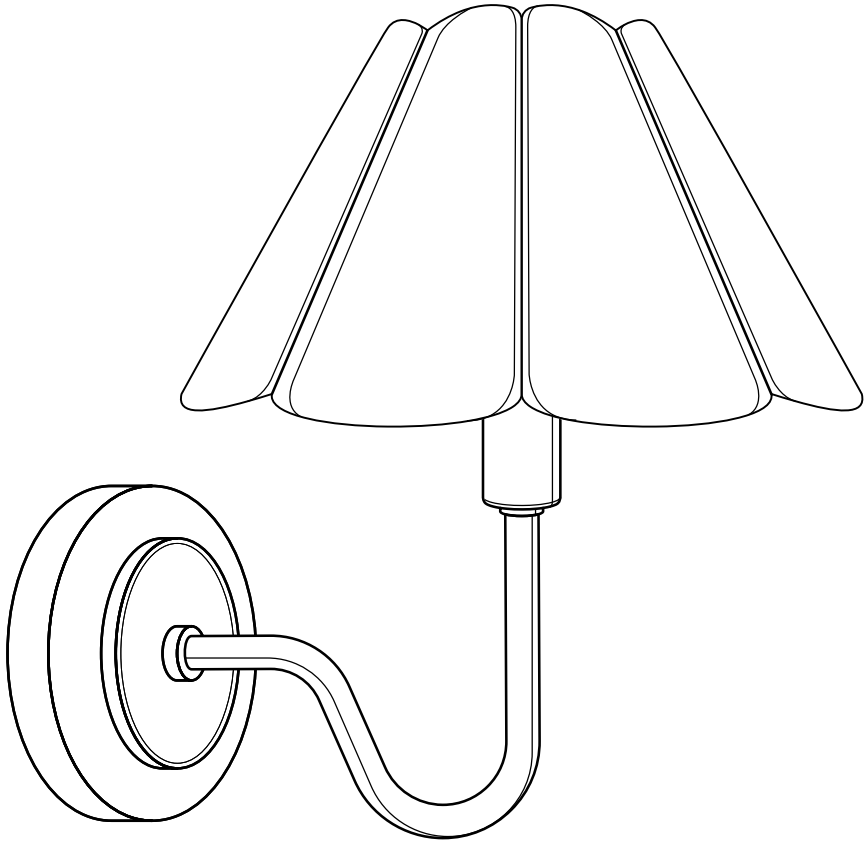

IMPORTANT SAFETY INFORMATION

Please read and follow all instructions before installing or using this product.

General Use

- For indoor use only
- This product is not a toy and is not intended for use by children
- Adult installation is required
- Install only on a stable, secure wall surface
- Do not modify or disassemble the product

Electrical & Battery Safety

- Use only the rechargeable battery and USB-C charging system supplied or recommended
- Charge using a standard 5V USB-C power source
- Do not charge the product if it or the charging cable is damaged
- Do not leave the product charging unattended for extended periods
- Do not expose the product to water, moisture, or excessive humidity
- Keep away from heat sources and open flames during charging

Installation Safety

- This product contains small parts
- Keep mounting hardware out of reach of children
- Ensure wall anchors and screws are properly secured before mounting
- Do not over tighten mounting screws

Care & Maintenance

- Clean with a soft, dry cloth
- Do not use harsh chemicals or abrasive cleaners
- Turn off and allow the product to cool before cleaning
- Battery Disposal
- Dispose of batteries in accordance with local recycling regulations



WARNING

California Proposition 65 Warning

WARNING: This product can expose you to chemicals including lead, which is known to the State of California to cause cancer and birth defects or other reproductive harm. For more information go to

v