Strongway®

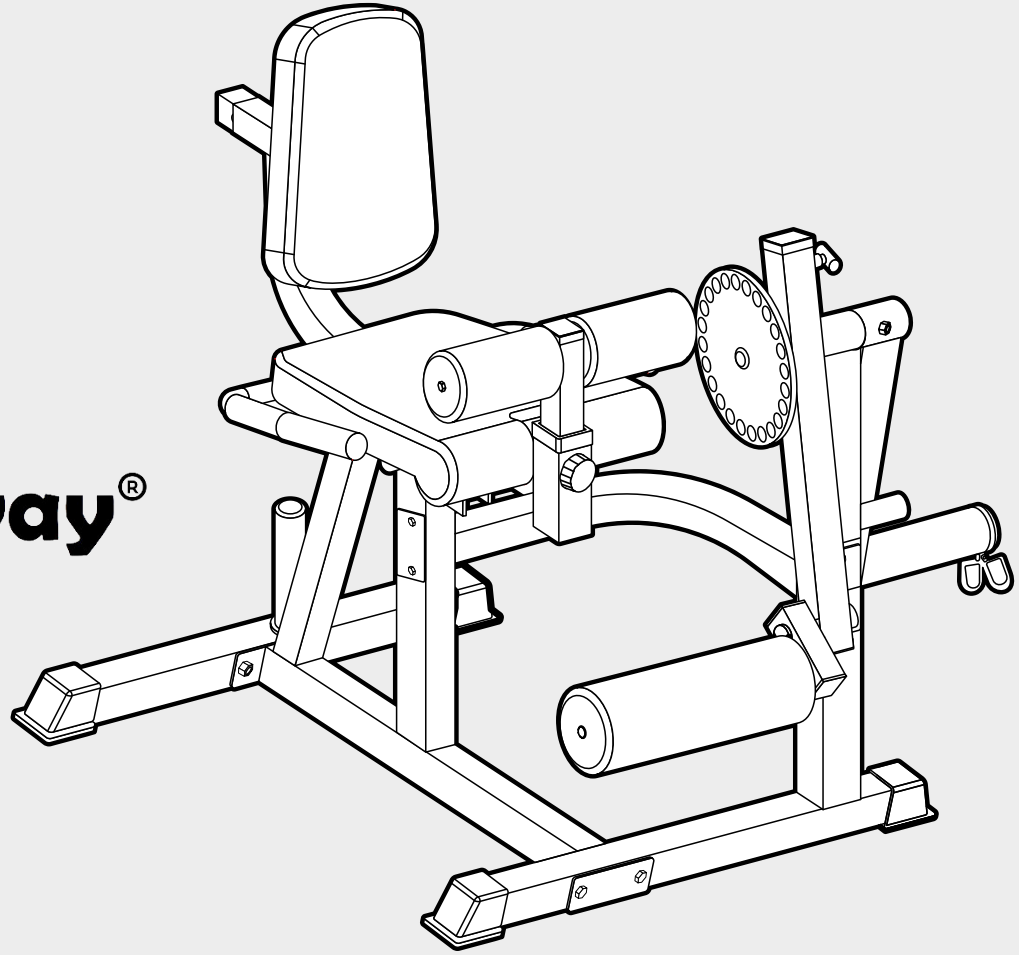

STRONGWAY LEG EXTENSION AND CURL MACHINE

ASSEMBLY MANUAL

Before You Begin

This exercise equipment is designed for maximum safety and durability. Please read this manual carefully before assembly and use. Follow all safety, care, and warning instructions to ensure safe operation and long product life.

Safety Instructions

1. Keep children and pets away from the equipment at all times. Never leave children unattended in the same room while the equipment is in use.
2. This equipment is intended for one user at a time only.
3. If you experience dizziness, nausea, chest pain, shortness of breath, or any abnormal symptoms, stop exercising immediately and consult a physician without delay.
4. Place the equipment on a firm, level surface with adequate clearance on all sides. Do not use near water, in damp areas, or outdoors.
5. Keep hands, fingers, hair, and loose objects away from all moving parts.
6. Wear appropriate exercise clothing. Do not wear loose garments, robes, jewelry, or accessories that may become caught in moving parts.
7. Use the equipment only for its intended purpose as described in this manual.
8. Do not use attachments or accessories not recommended by the manufacturer.
9. Always perform proper warm up and stretching exercises before starting your workout.
10. Do not use the equipment if it is damaged, improperly assembled, or not functioning correctly. Inspect before each use.

Warnings

- Consult your physician before beginning any exercise program, especially if you have a medical condition, heart problem, high blood pressure, or are recovering from injury.
- Incorrect or excessive training may result in serious injury.
- Ensure all bolts, nuts, and adjustment knobs are securely tightened before each use.
- Do not exceed the maximum user weight capacity specified for this equipment.
- Stop immediately if you hear unusual noises or feel instability during use.
- This equipment is designed for home use only unless otherwise specified.

Care and Maintenance

- Wipe the equipment with a clean, dry cloth after each use to remove sweat and moisture.
- Clean with mild soap and water only. Do not use abrasive cleaners, solvents, or harsh chemicals.
- Regularly check and tighten all bolts and fasteners to ensure stability.
- Lubricate moving parts periodically if required, following manufacturer recommendations.
- Store the equipment in a dry, indoor environment away from direct sunlight and humidity.
- Replace worn or damaged parts immediately. Use only manufacturer approved replacement parts.

Proper maintenance and safe operation will help extend the life of your equipment and ensure safe performance.

Tools Required

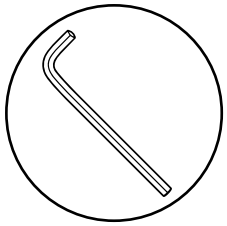
Allen Wrench Set

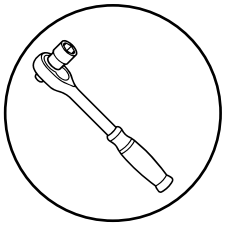
Socket Wrench Set

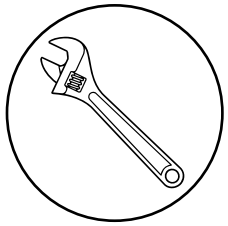
Adjustable Wrench

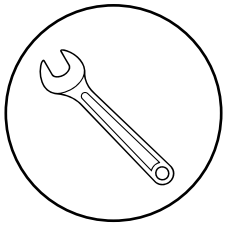
Crescent Wrench

Note: It is strongly recommended that at least two people assemble this product.

Hand tighten all nuts and bolts during assembly. Do not fully tighten any hardware until the entire equipment has been completely assembled. Once all parts are properly installed, use a wrench to securely tighten all nuts and bolts.
References to LEFT and RIGHT parts are based on the perspective of a person standing behind the equipment and facing toward the front.
This product is designed and rated for home use only. Use of this product in a commercial or institutional setting will void all warranties and may result in serious injury or death.

PARTS LIST

 1. Main Frame ×1	 2. Rear Floor Pipe ×1	 3. Front Ground Pipe ×1	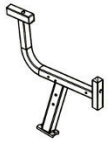 4. Main Frame ×1	 5. Connector Frame ×1
 6. Weight Plate Storage Holder ×1	 7. Pull Pin ×2	8. M10×70mm Hex Head Bolt ×8	9. M10×70mm Carriage Bolt ×4	 10. M10 Washer ×28
 11. M10 Nut ×14	12. M10×75mm Hex Head Bolt ×2	 13. Seat Pad Support ×1	 14. Hand Handle A ×1	 15. Hand Handle B ×1
 16. Weight Plate Holder ×1	 17. Backrest Pad Support ×1	 18. Foam Roller for Leg Stretching ×1	 19. Rotate Arm ×1	 20. Backrest Pad ×1
 21. Seat Pad ×1	 22. Spring Clip ×1	 23. Long Foam Roller ×1	24. M8×50mm Hex Head Bolt ×4	25. M8×30mm Hex Head
 26. M8 Washer ×8	 27. Wrench ×1	 28. Hex Key Wrench ×1		

It is strongly recommended that at least two people assemble this product.

Step 01

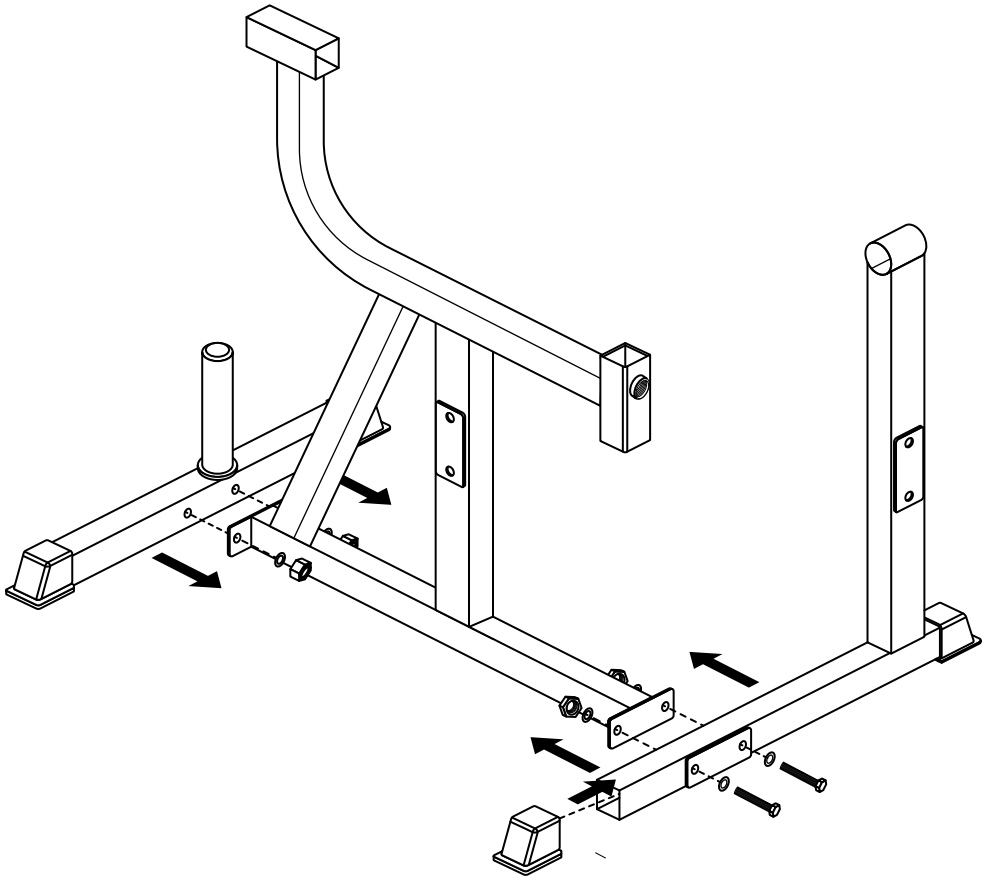

Step 01
Attach the main frame base to the rear support frame. Align all mounting holes carefully and insert the bolts with washers. Hand tighten the hardware only at this stage. Ensure the frame is positioned on a flat, stable surface before proceeding.

Step 02

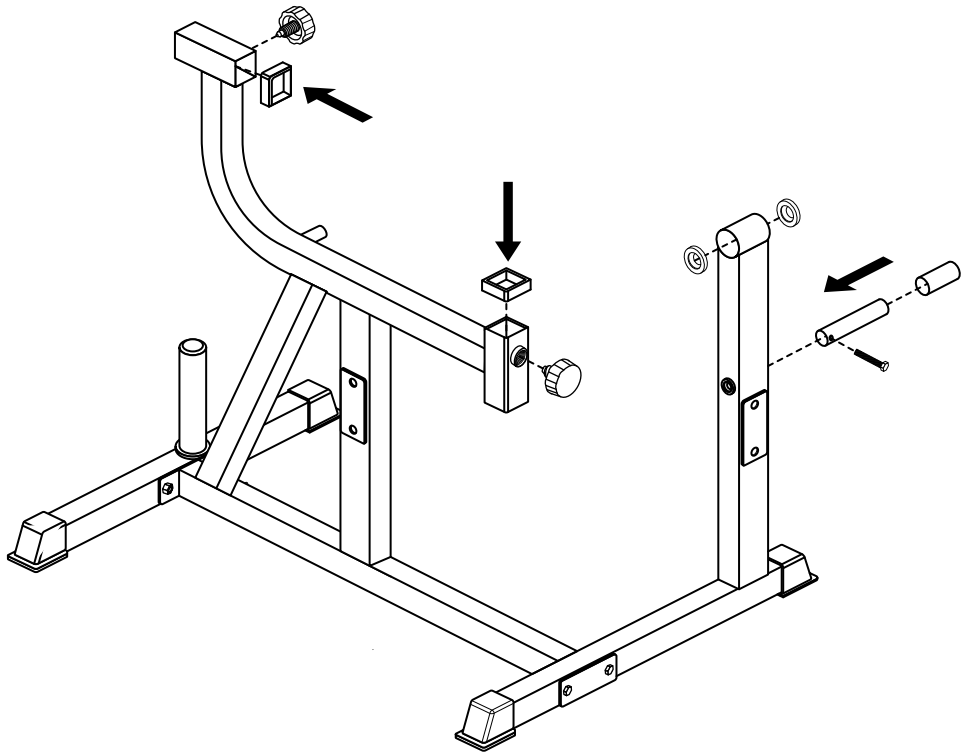

Step 02
Attach the upright support frame to the base assembly. Ensure the frame is aligned vertically and seated correctly into the base brackets. Insert the required bolts and washers, then hand tighten securely.

It is strongly recommended that at least two people assemble this product.

Step 03

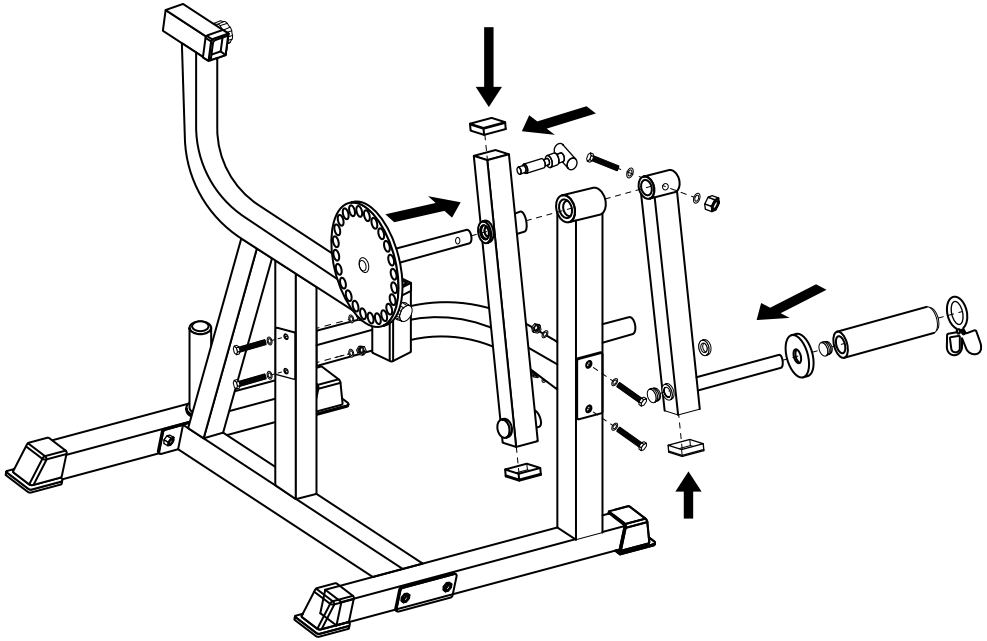

Step 03
Slide the leg extension and curl arm into the designated pivot housing.
Insert the pivot axle bolt and secure with washers and lock nut. Ensure the arm rotates smoothly without restriction.

Step 04

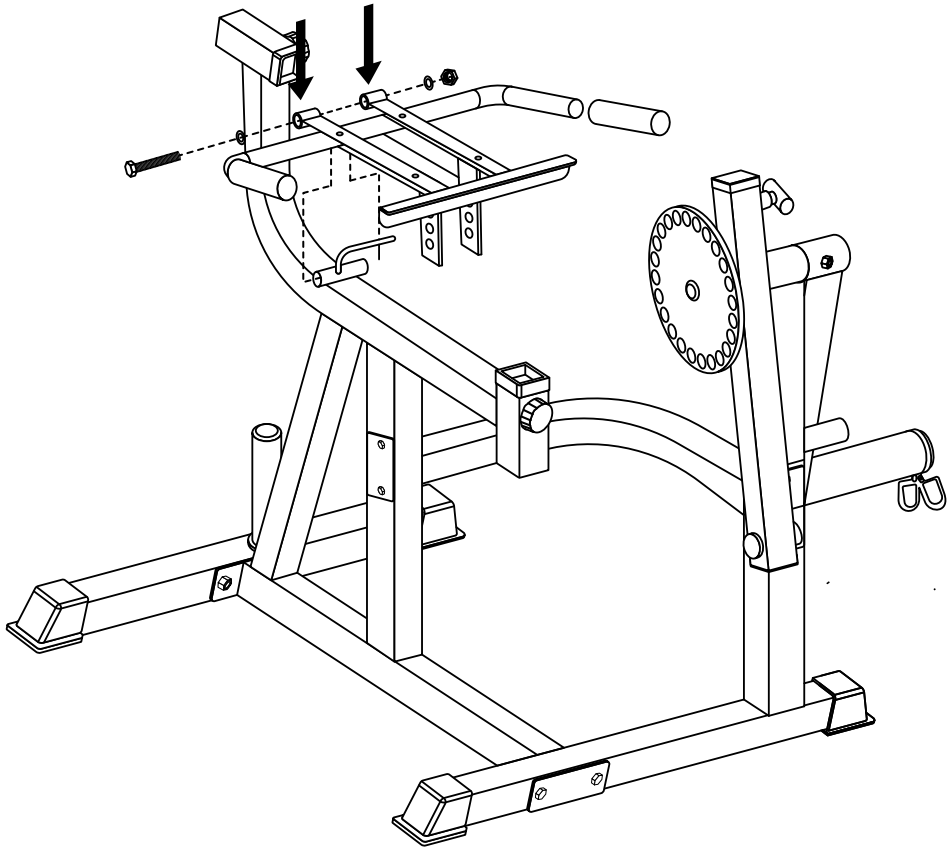

Step 04
Attach the upright support frame to the base assembly. Ensure the frame is aligned vertically and seated correctly into the base brackets. Insert the required bolts and washers, then hand tighten securely.

It is strongly recommended that at least two people assemble this product.

Step 05

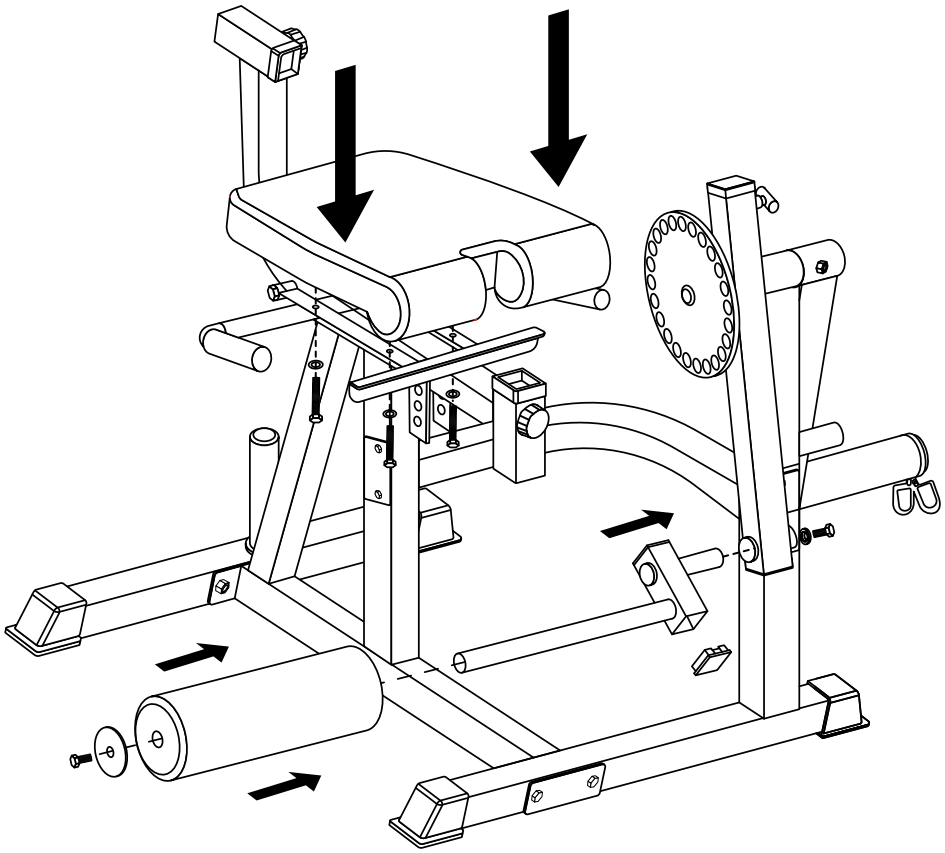

Step 05
Attach the seat pad and backrest pad using the provided bolts. Secure the leg rollers and foam pads onto the extension arm. Confirm that rollers are centered and properly aligned before tightening hardware.

Step 06

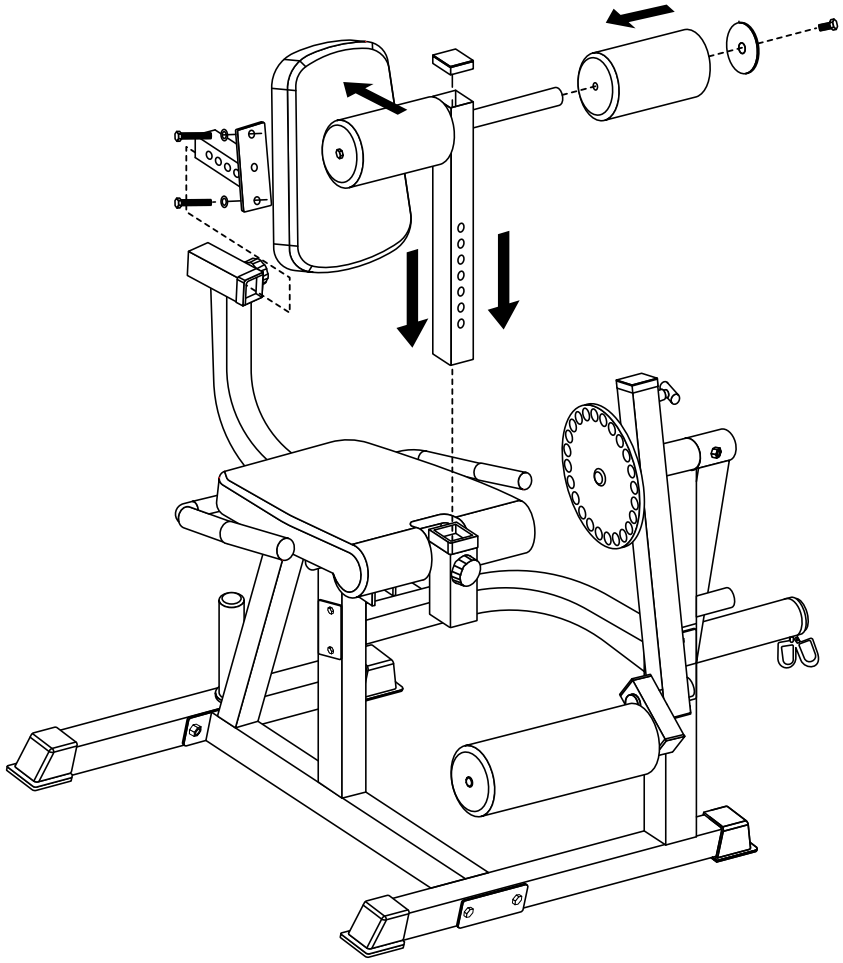

Step 06
Install any remaining components, adjustment knobs, or weight holders as shown. Check that all parts are correctly aligned. Using the appropriate tools, fully tighten all bolts and nuts securely.

It is strongly recommended that at least two people assemble this product.

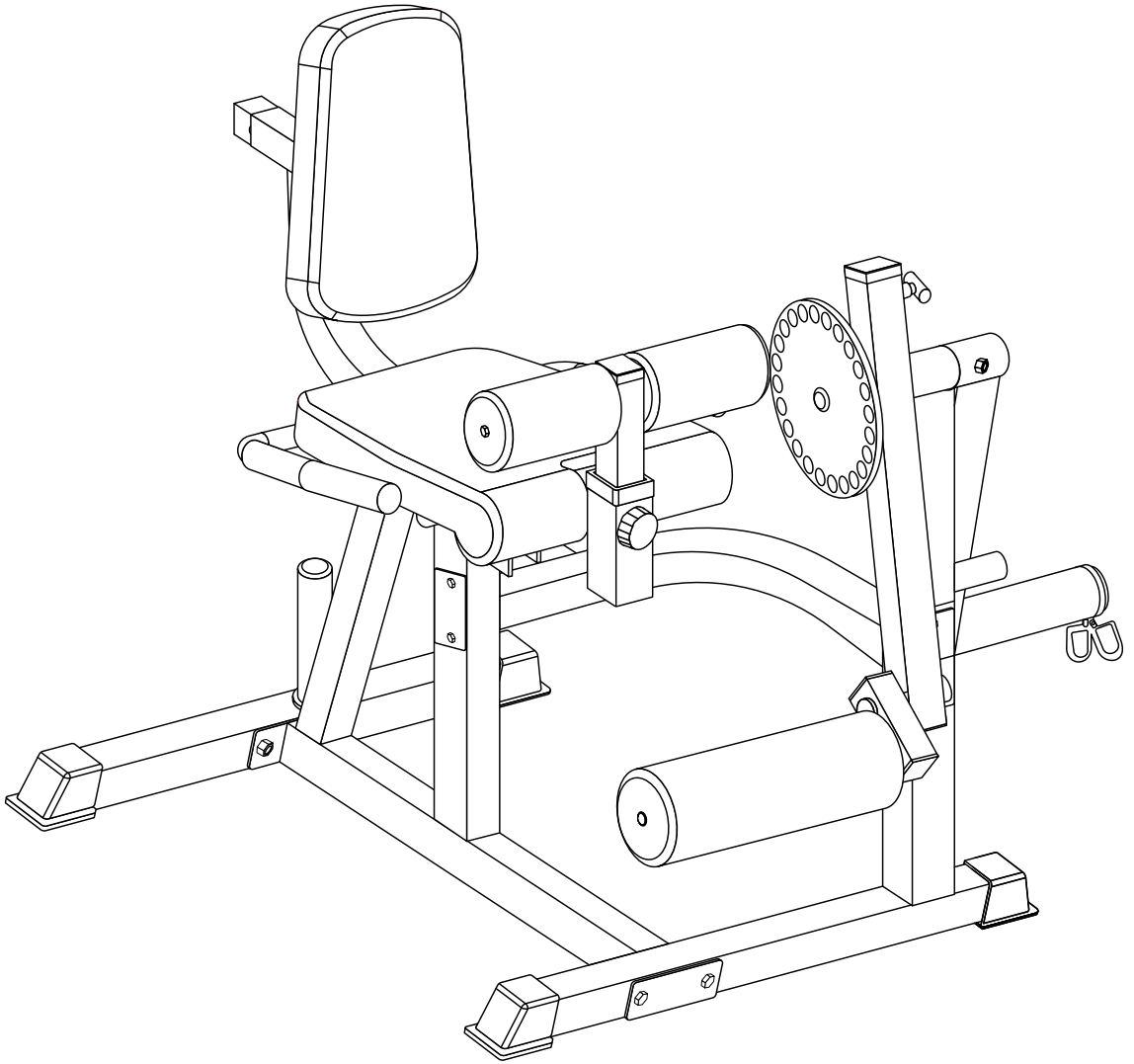

It is strongly recommended that at least two people assemble this product.