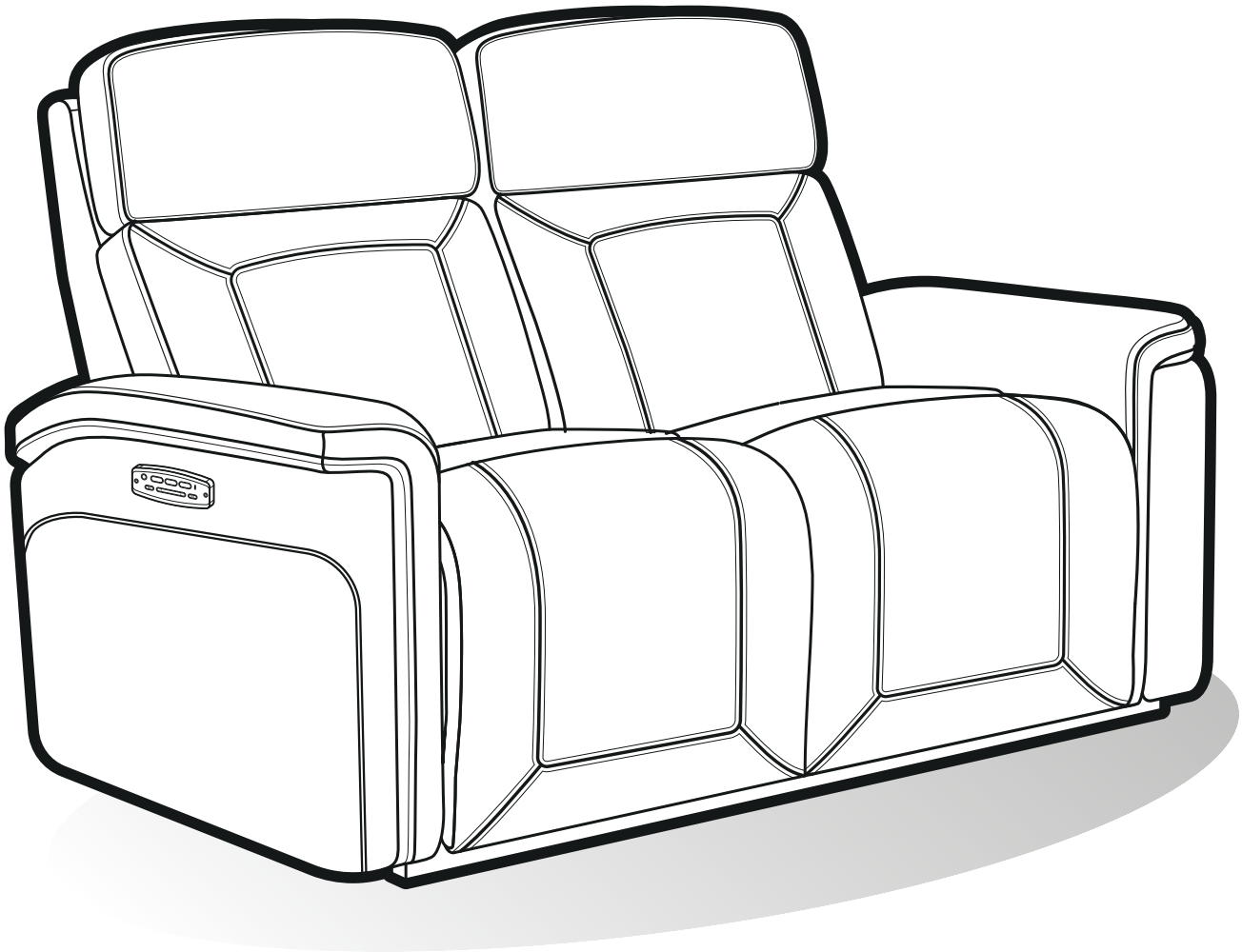

INSTRUCTION MANUAL

K2843-73PHR LOVESEAT

⚠ Please read all instructions before using the Loveseat.

Issue: 2026-10 v1

SAFETY

Thank you for purchasing this product. The product you have purchased combines state-of-the-art components with safety, comfort, and styling in mind. Please read and follow all instructions, warnings, and notes in this manual and all other accompanying literature before attempting to operate this product for the first time.

Please keep this manual in a safe place. If there is any information in this manual which you do not understand, or if you require additional assistance for setup or operation, please contact your retailer. Failure to follow the instructions, warnings and notes in this manual and those located on your product can result in personal injury or product damage and will void the product warranty.

SHIPPING AND DELIVERY

If damage has occurred during transport, either to the packaging or content, please contact the retailer.

ELECTRICAL SAFETY

DANGER! To reduce the risk of electric shock:
Always unplug this product from the electrical outlet before cleaning or servicing.

WARNING! To reduce the risk of burns, fire, electric shock, or injury:

1. Unplug from the outlet before attaching or removing any parts.
2. Never operate this product if the power cord or plug is damaged, if the unit is not working properly, or if it has been dropped or exposed to water. Discontinue use and contact an authorized service center for inspection and repair.
3. Keep the power cord and plug away from heated surfaces and other heat sources.
4. To disconnect, return all controls to the off position, then remove the plug from the outlet.
5. When operating, make sure the power cord is clear of the base, legs, and moving mechanism to prevent damage to the cord or plug.
6. Do not strain, pull, or stretch the power cord.
7. Do not use extension cords or power strips with this product.
8. Keep out of reach of children.



NOTE:
Make sure all internal plugs and connectors are fully and firmly secured before connecting the power cord to the wall outlet. Plugging in before all connections are secured may result in damage to the unit.

NOTE:
The USB Type-C ports (where applicable) are designed to supply 30V DC and are intended for charging small devices such as smartphones and tablets only. They cannot be used to power or charge laptop computers (PC or Mac). Attempting to charge a laptop via the USB ports may cause damage to the laptop, the USB port, or both, due to incompatible voltage requirements.

ASSEMBLY INSTRUCTIONS

1

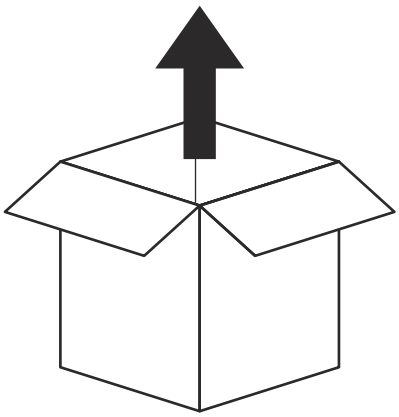

With a second person assisting, carefully open the outer carton from the top. Lift the loveseat components out of the box and place them on a clean, stable floor surface.
Inside the rear area of the seat base, you will find additional packages containing the power supply unit. Cut any plastic ties or tape and remove these items. Set them aside in a safe location.

2

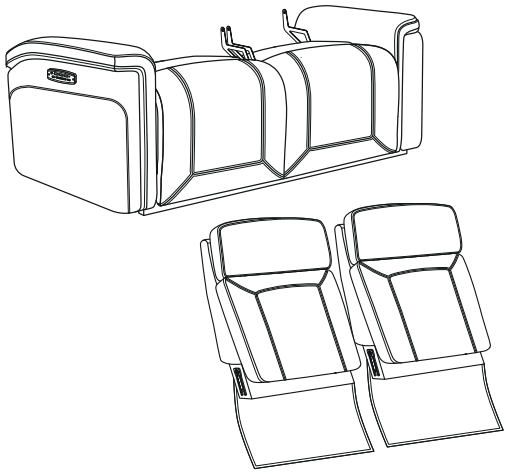

Place all components on a clean, flat surface where you can clearly see them. Check each item carefully for any signs of transport damage, including dents, tears, scratches, bent metal, or broken plastic.

3

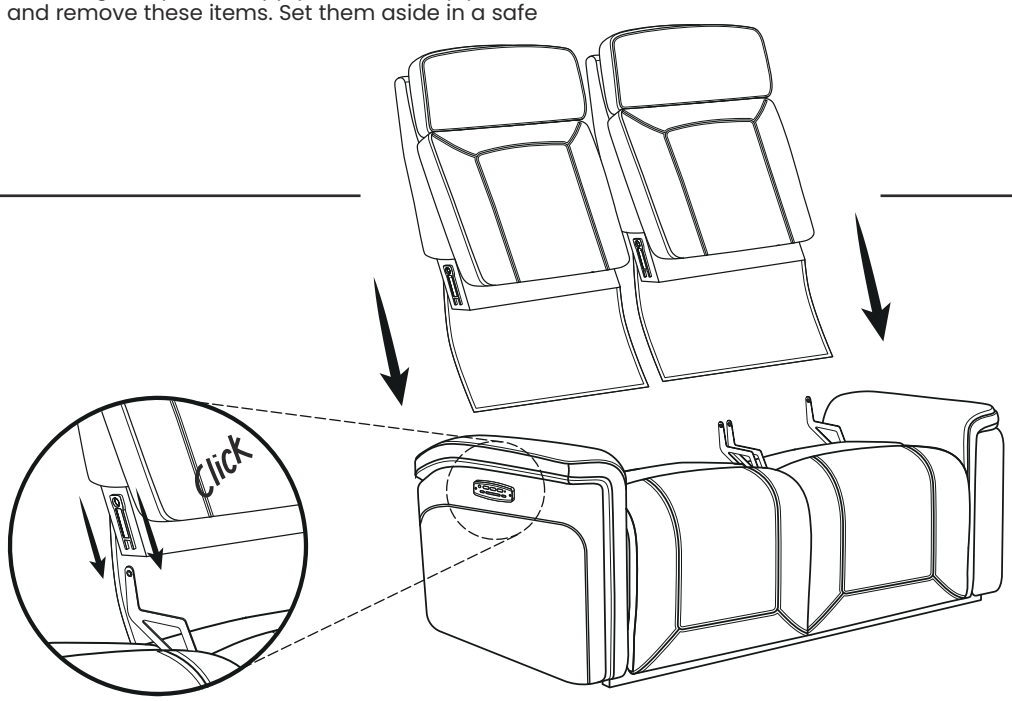

Each backrest is installed individually. Repeat the following steps for each seat. With your assistant holding the backrest securely, lay it face-down on a clean padded surface to protect the upholstery. Identify the metal receiver brackets on the underside of the backrest. These are the two metal slots that will accept the posts on the seat base. Position the seat base so that its two metal posts are visible and accessible.
Together with your assistant, lift the backrest and hold it directly above the rear of the seat base. Carefully lower the backrest so the metal receivers align with the corresponding metal posts on the seat base. Allow the posts to slide fully into the receivers. You should feel the backrest settle into position.
Press firmly downward on the top of the backrest on both the left and right sides simultaneously. You will hear or feel a distinct click on each side when the backrest has locked securely into place. Gently try to lift the backrest away from the base to confirm it is properly locked.

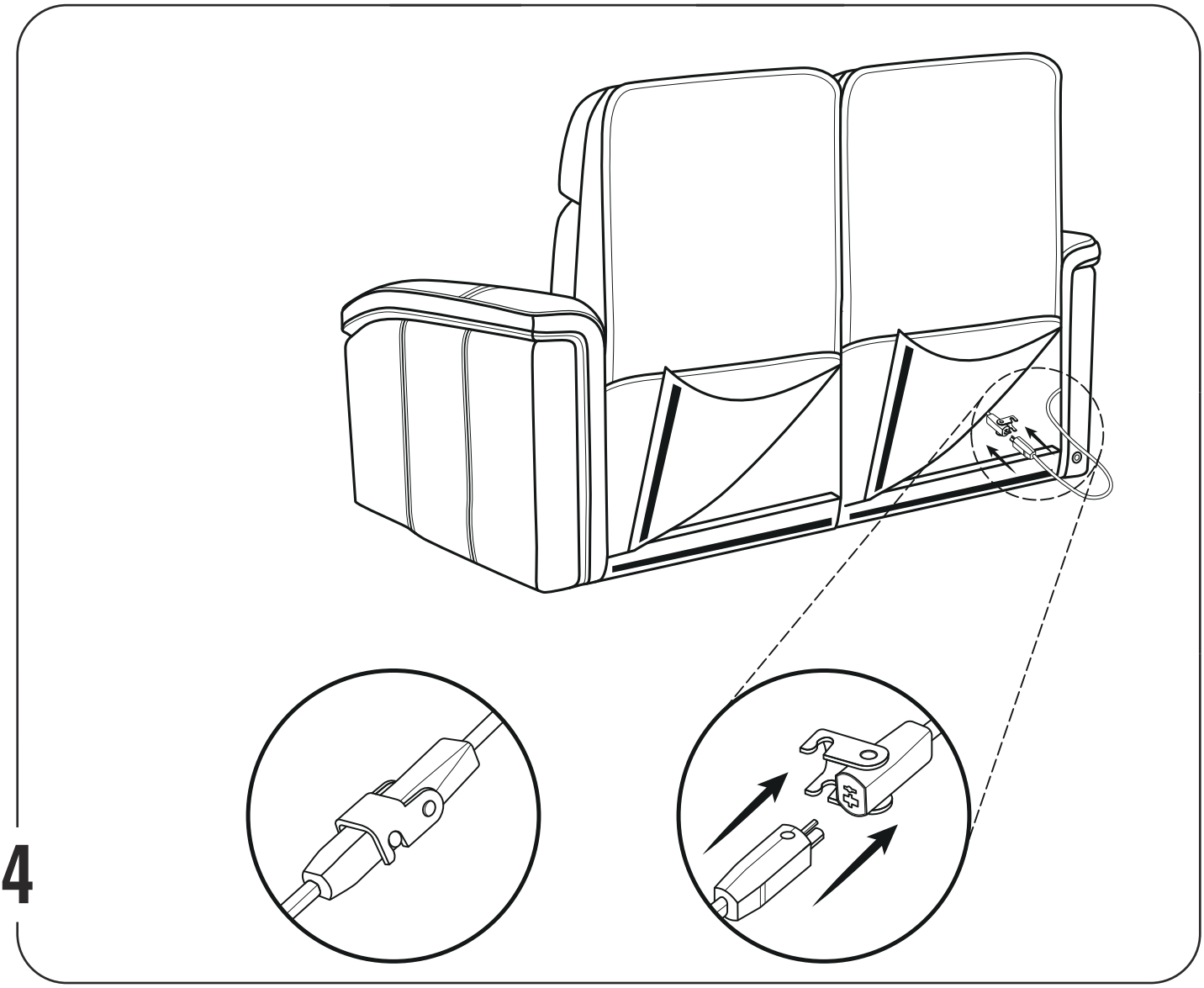

4

Route the wiring harness from the backrest down towards the power supply connection point at the rear of the seat base. Connect the harness plug to the corresponding socket. These are keyed to ensure correct orientation, so do not force the connection. Press the connectors together firmly until you feel them secure into place. Ensure the cable is neatly routed and not kinked, twisted, or trapped beneath the loveseat frame.

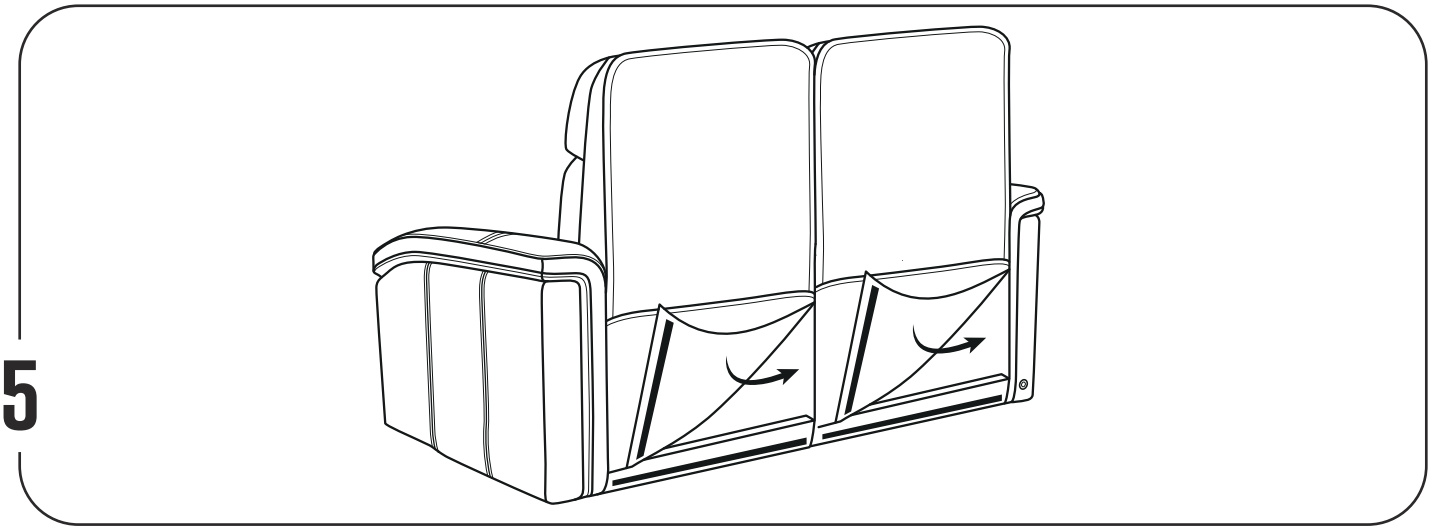

5

Secure the back flaps to the loveseat base for a clean look.

6

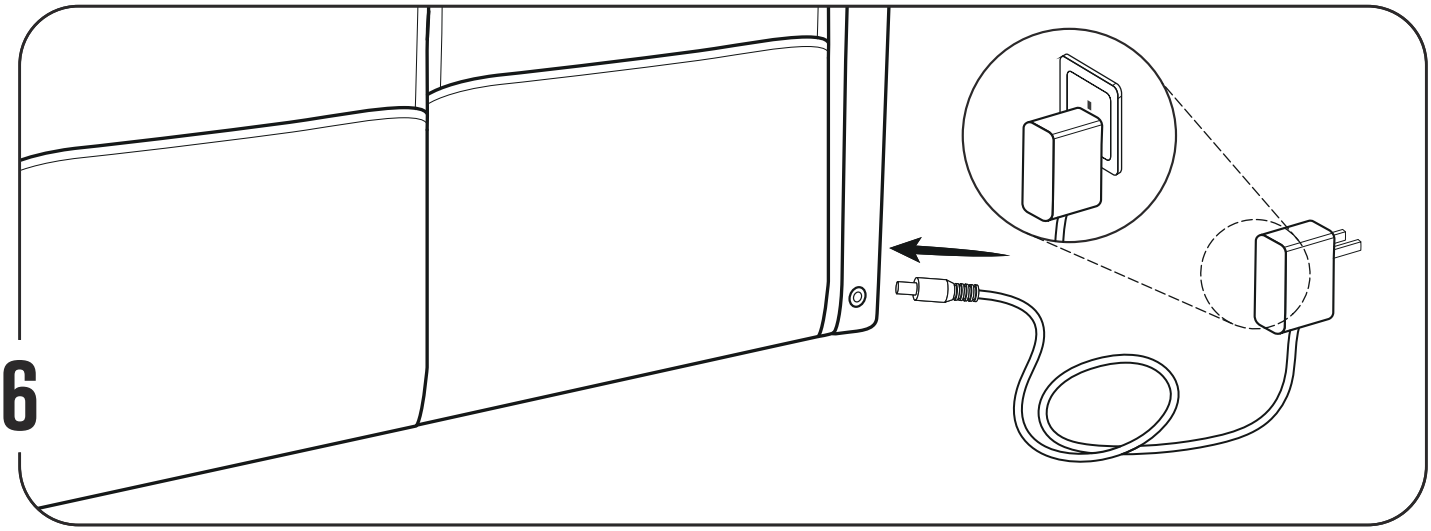

Take the power supply unit and insert the power supply output plug into the socket located at the lower right of the seat base. Do this before plugging the power cord into a wall outlet. Ensure the plug is fully and firmly installed. Then, route the cable away from the sofa's moving parts, base, and legs. Plug it into a power outlet. The sofa is now ready for initial operation. Test all functions.

WARNING!

Assembly requires two people. Do not attempt to assemble the sofa alone.

Before beginning assembly, clear a sufficient area of floor space. Have both people ready before lifting any heavy components. Follow each step in order and do not skip ahead.

CONTROL PANEL OPERATING INSTRUCTIONS

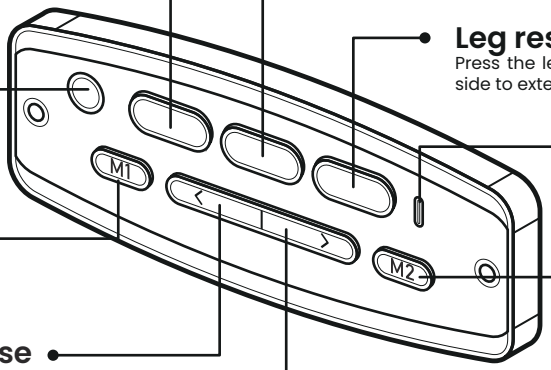

Headrest Control
Press the left side to retract the headrest. Press the right side to extend the headrest.

Home Button
Press and hold to return all positions to closed. Please note: the Home button does not return the seat depth to the closed position. This function is controlled independently.

Memory Button 1
Press and hold for 3 seconds to memorize the current position.

Depth Position Decrease
Decrease the seat depth by pressing this button. Release once you reach the desired position.

Backrest Control
Press the left side to recline the backrest. Press the right side to close the backrest.

Leg rest Control
Press the left side to retract the leg rest. Press the right side to extend the leg rest.

Type-C Outlets
Used to charge small devices such as smartphones and tablets.

Memory Button 2
Press and hold for 3 seconds to memorize the current position.

Depth Position Increase
Increase the seat depth by pressing this button. Release once you reach the desired position.

SEAT DEPTH OPERATING INSTRUCTIONS

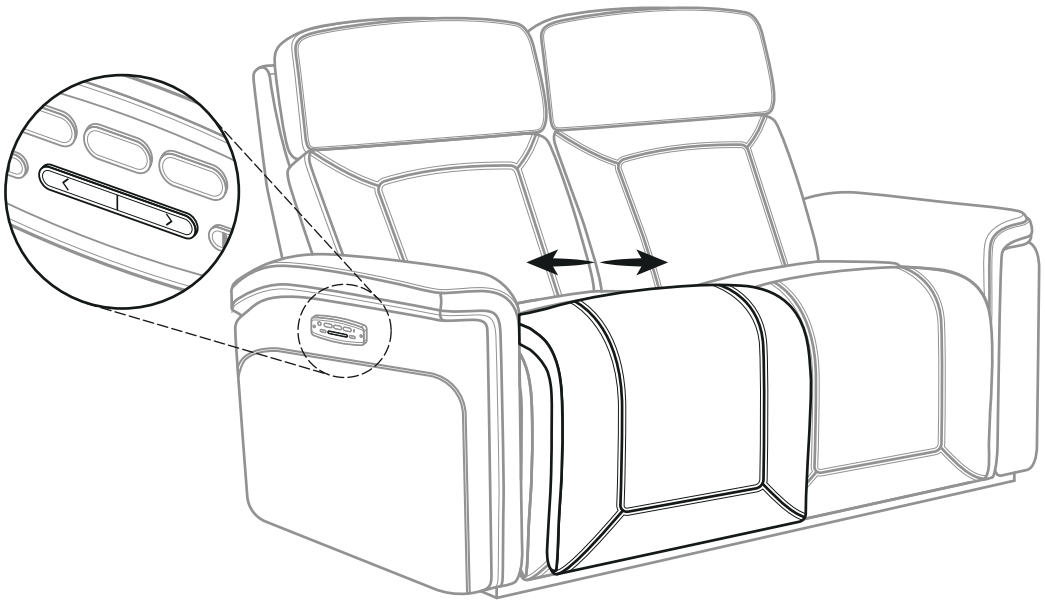

NOTE: The Home button does not return the seat depth to the closed position. Seat depth is controlled independently using the Depth Position buttons.

CORRECT AND INCORRECT USE GUIDES

INCORRECT WAY

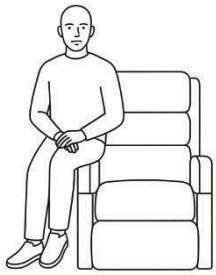

✗ **DO NOT** sit on the armrests.



✗ **DO NOT** distribute excess weight on the backrests.

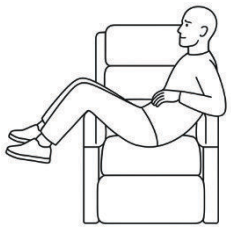

✗ **DO NOT** distribute excess weight on the armrests.

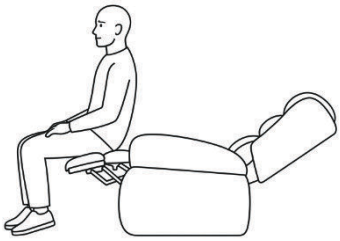

✗ **DO NOT** sit on the footrest when extended.

CORRECT WAY

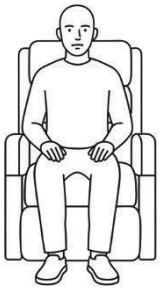

DO sit upright and centrally aligned in the seat.

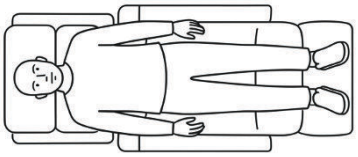

DO lie centrally and flat.

ROUTINE CLEANING

Frequent vacuuming using an upholstery attachment and light brushing to remove loose dust, pet hair, and grime is the recommended method of day-to-day maintenance. Avoid abrasive brushes or pads.

WARNING!

Keep the loveseat away from direct contact with any heat source, including space heaters, radiators, and lit cigarettes. Exposure to heat sources may cause permanent damage, personal injury, or fire.

NOTE:

To prevent fading and UV damage, position the loveseat away from direct sunlight and strong artificial UV light sources.

ELECTRONICS CARE

Inspect all visible wiring harnesses, connectors, and the power cord regularly. Look for signs of damage including fraying, cracking, melting, discoloration, or loose connections. If any damage is found, unplug the loveseat from the wall outlet immediately and do not use it again until it has been assessed and repaired by an authorized service provider. Keep all electronic components, including the power supply, control handset, and wiring, free from moisture, liquids, and extreme temperatures. This loveseat is designed for indoor use only and should not be exposed to outdoor conditions.

