PATISHON™

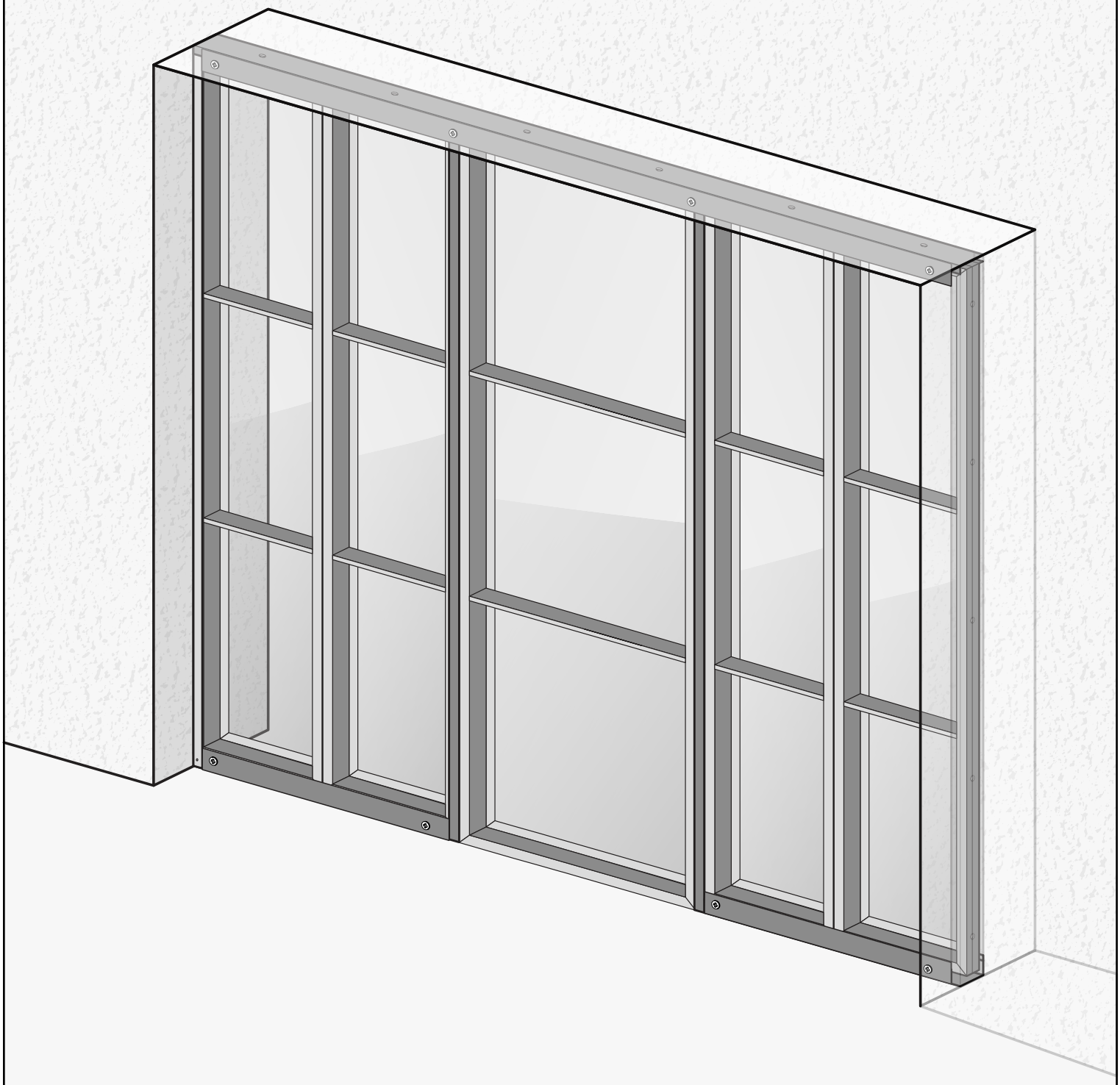

INSTALLATION GUIDE

https://www.patishon.com

+44 1603 380367 hello@patishon.com

Tools needed:

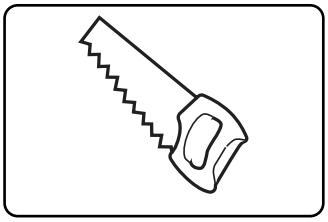
Metal Saw

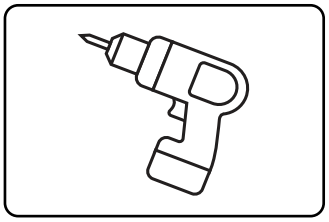
Drill

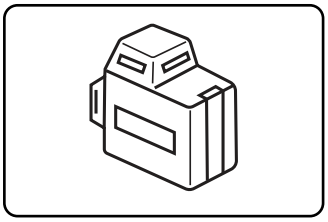
Laser Level

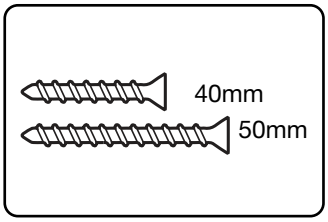

Ceiling/ Wall Fixings

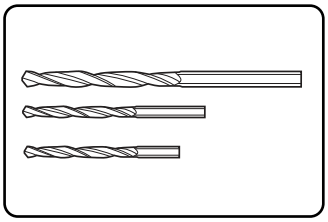
2.5mm/3.5mm/5mm Drill

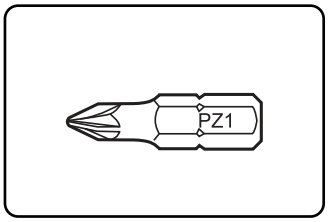

PZ1 Screw Driver

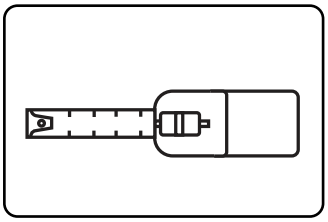
Tape Measure

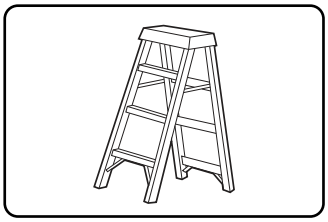
Step Ladder

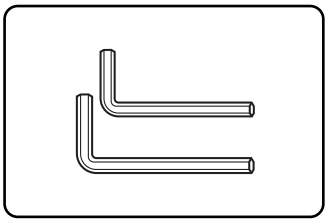
2.5mm/3mm Alan Key

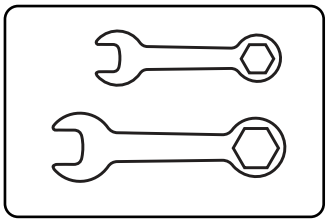
8mm/13mm Spanner

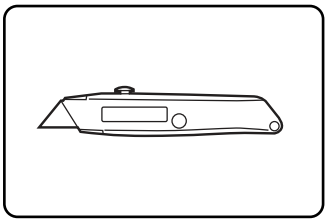
Knife

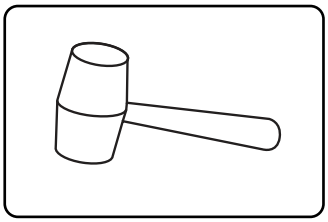
Mallet

Installation:

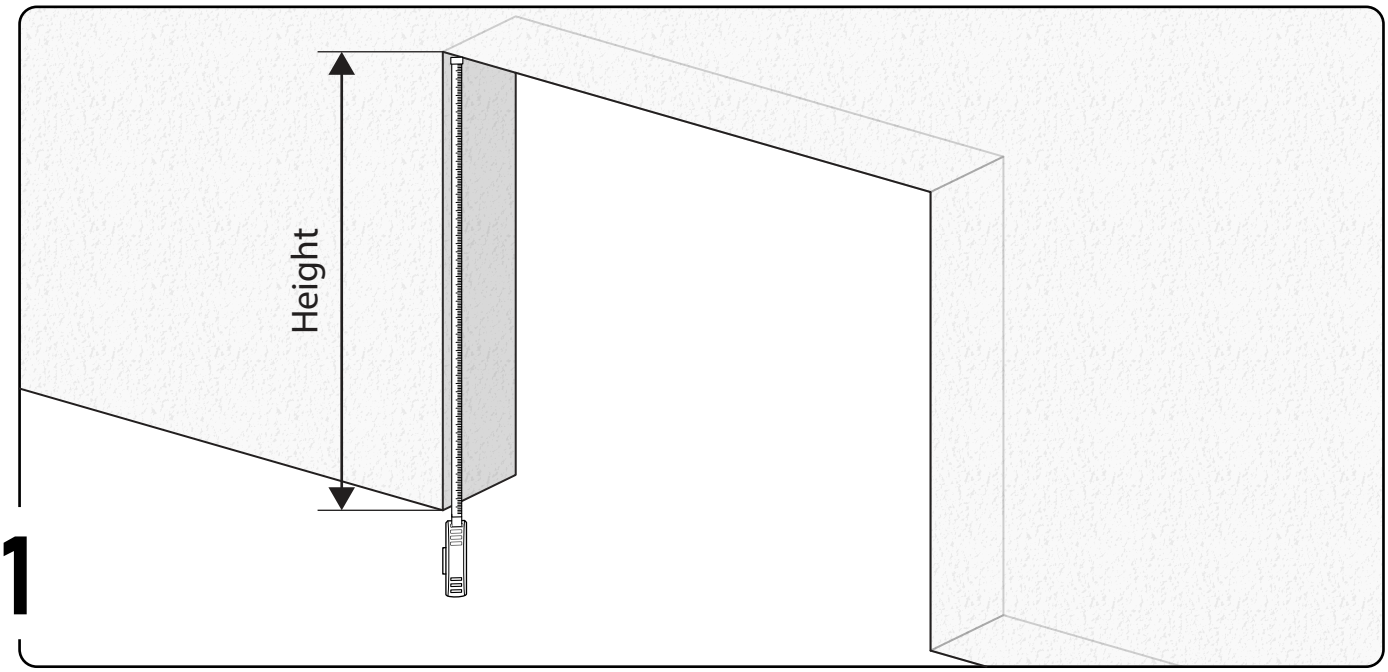

1

Using a tape measure, measure the full height of the wall opening from floor to ceiling. This measurement determines the exact length to cut the head track. Record this dimension before cutting.

+44 1603 380367 hello@patishon.com

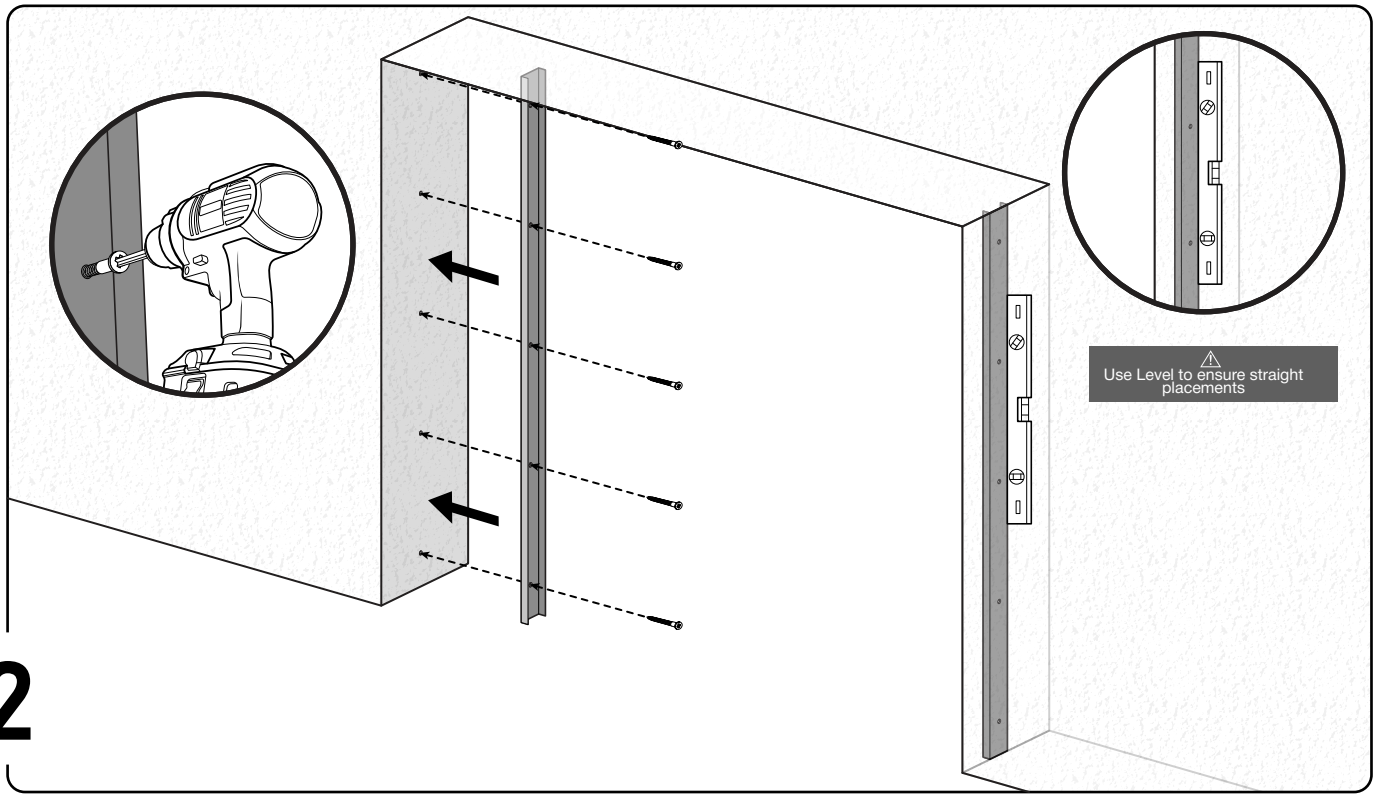

2

Position the side rails vertically on both sides of the opening. Use a drill to secure them to the wall with the appropriate fixings. Use a laser level or spirit level to confirm each rail is perfectly plumb before fully tightening the screws.

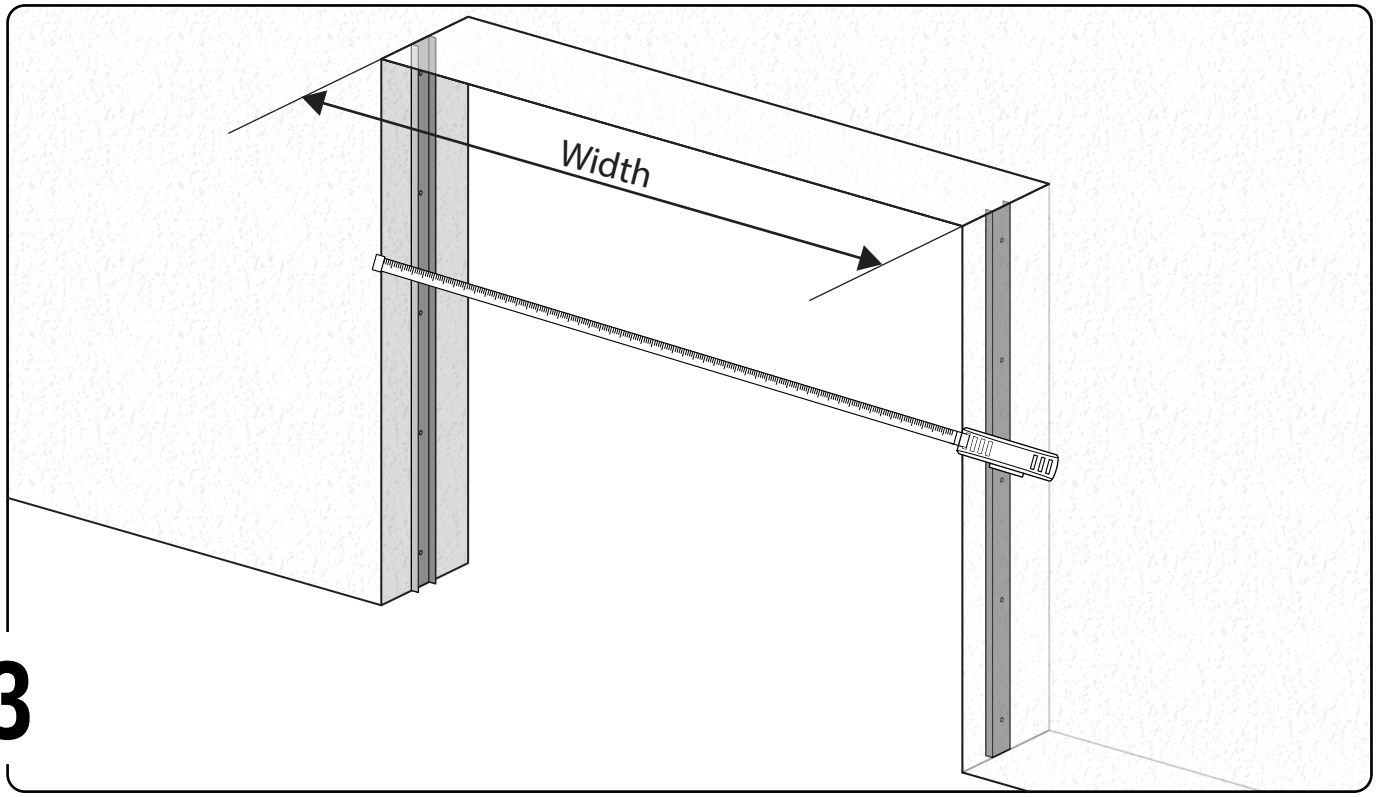

3

Once both side rails are fixed in position, measure the internal width between them. This measurement is required to cut the head track and bottom rail to the correct length.

+44 1603 380367 hello@patishon.com

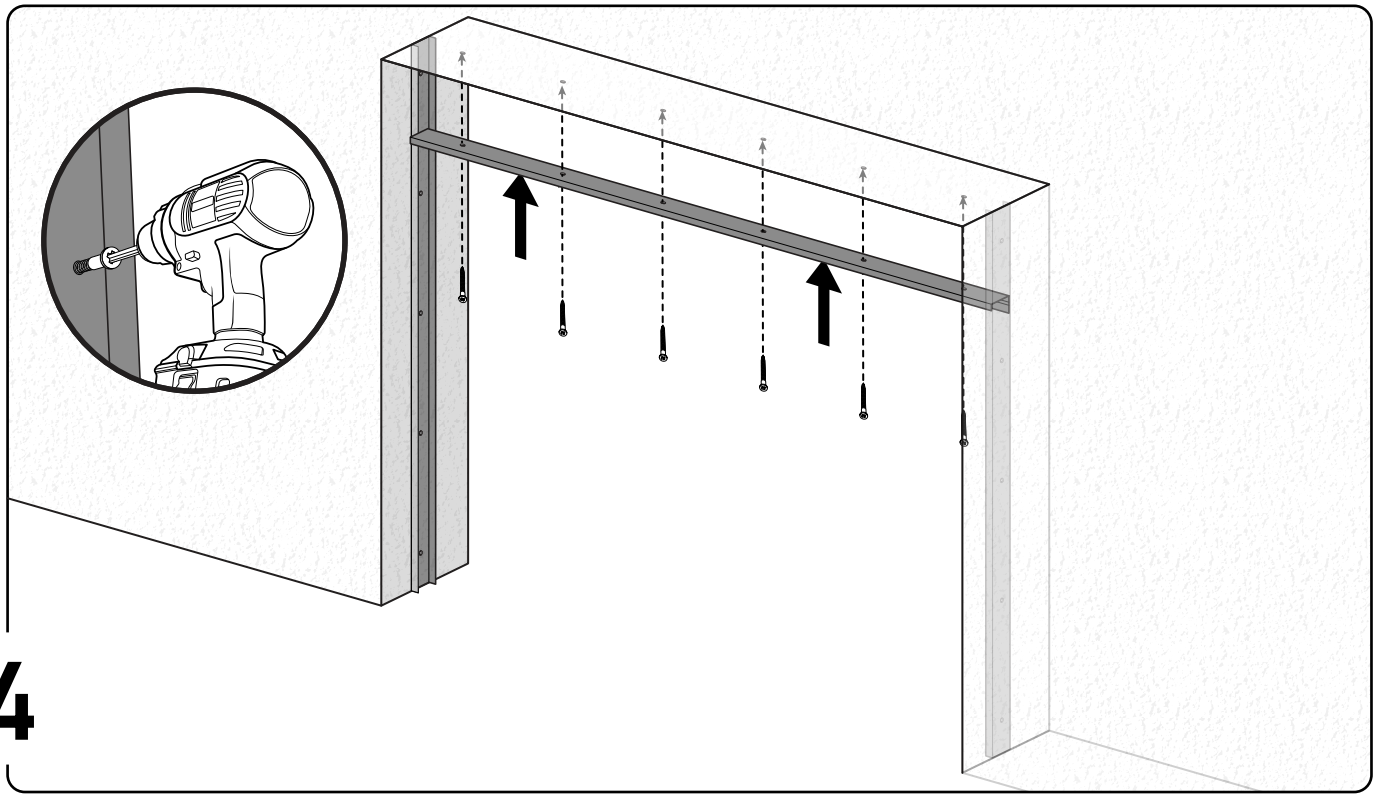

4

Cut the head track to the measured width using a metal saw. Position it at the top of the opening and fix it to the ceiling or wall using appropriate ceiling/wall fixings spaced evenly across the track length.

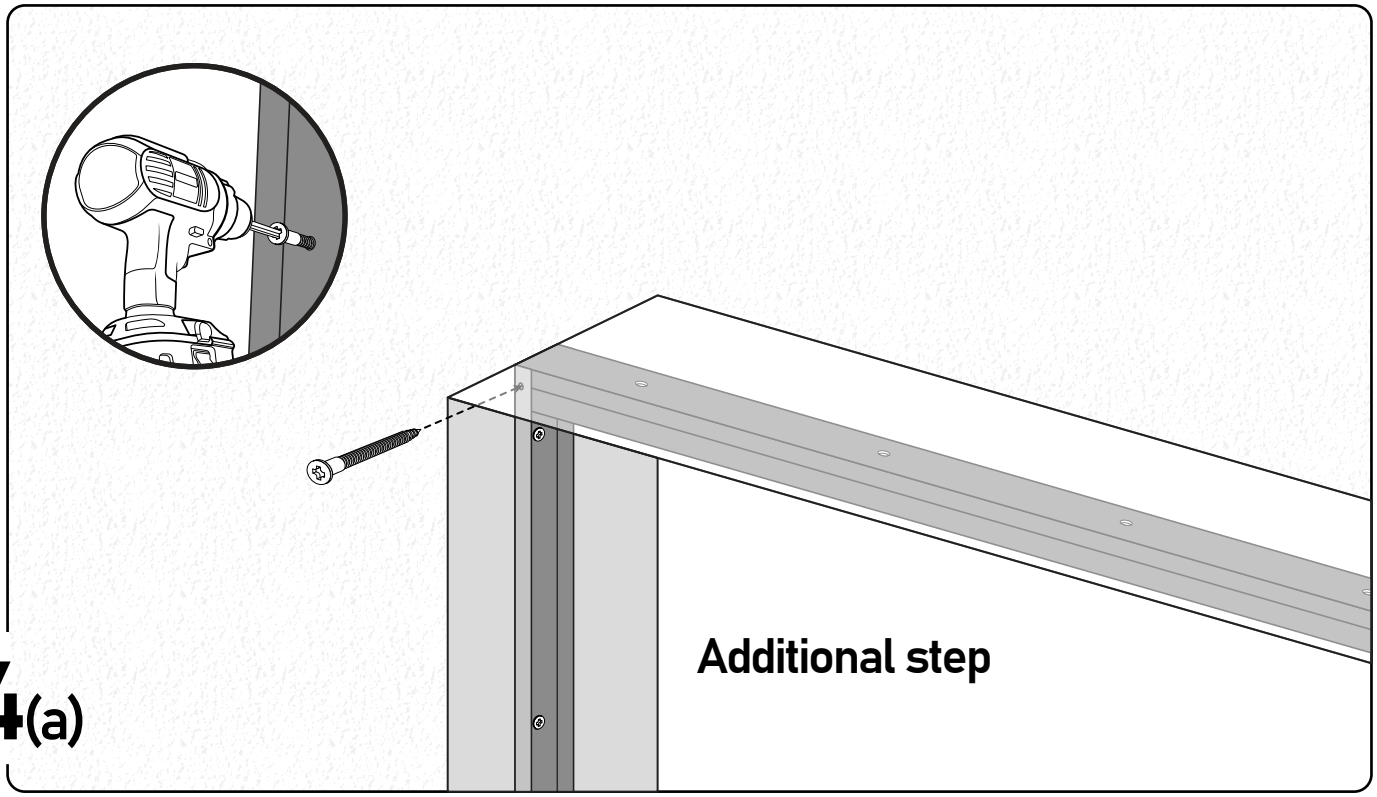

4(a)

At each top corner where the head track meets the side rail, drive a screw through the corner joint to lock them together. This provides additional rigidity to the overall frame.

+44 1603 380367 hello@patishon.com

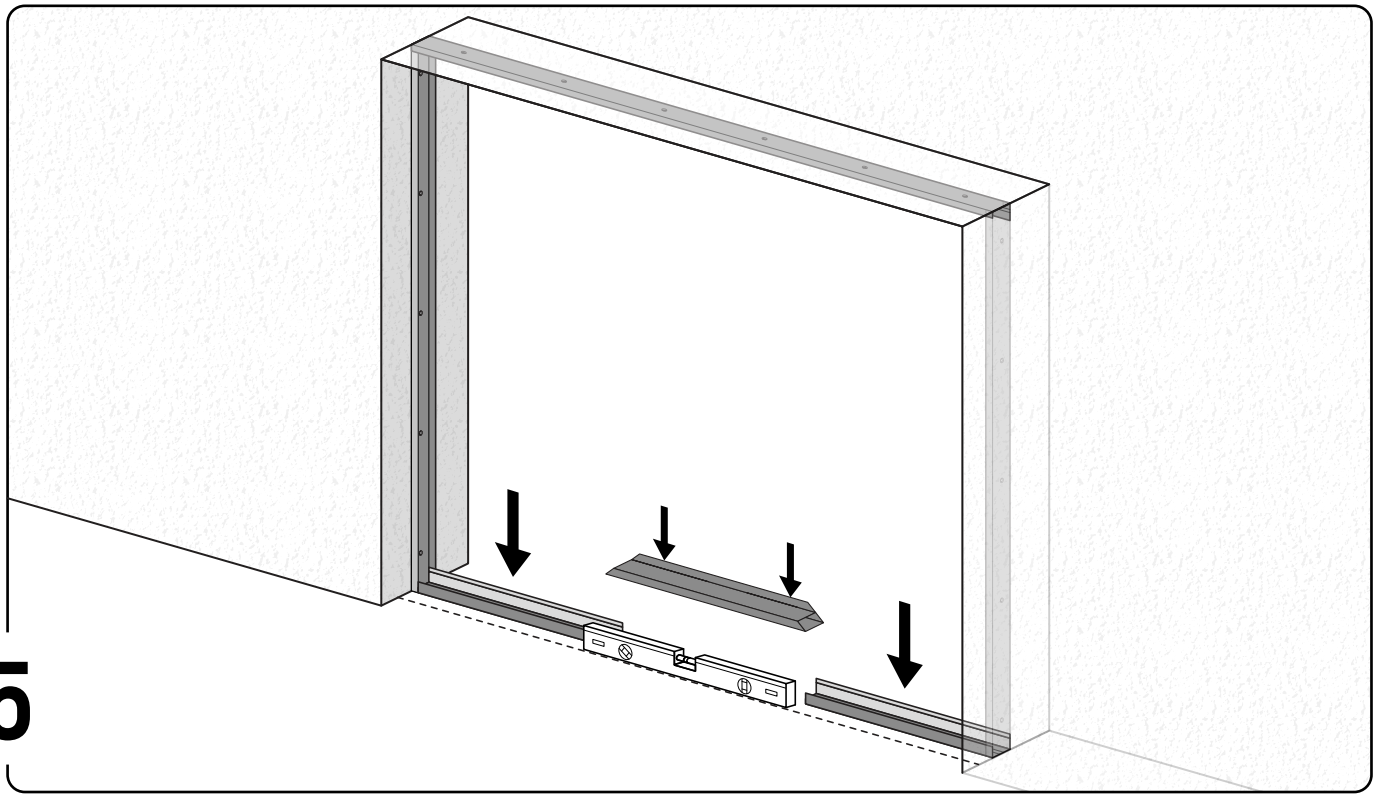

5

Insert the bottom rail into position at the base of the opening between the two side rails. As a guide, you can temporarily place the door bottom rail alongside it to verify the spacing is accurate before drilling.

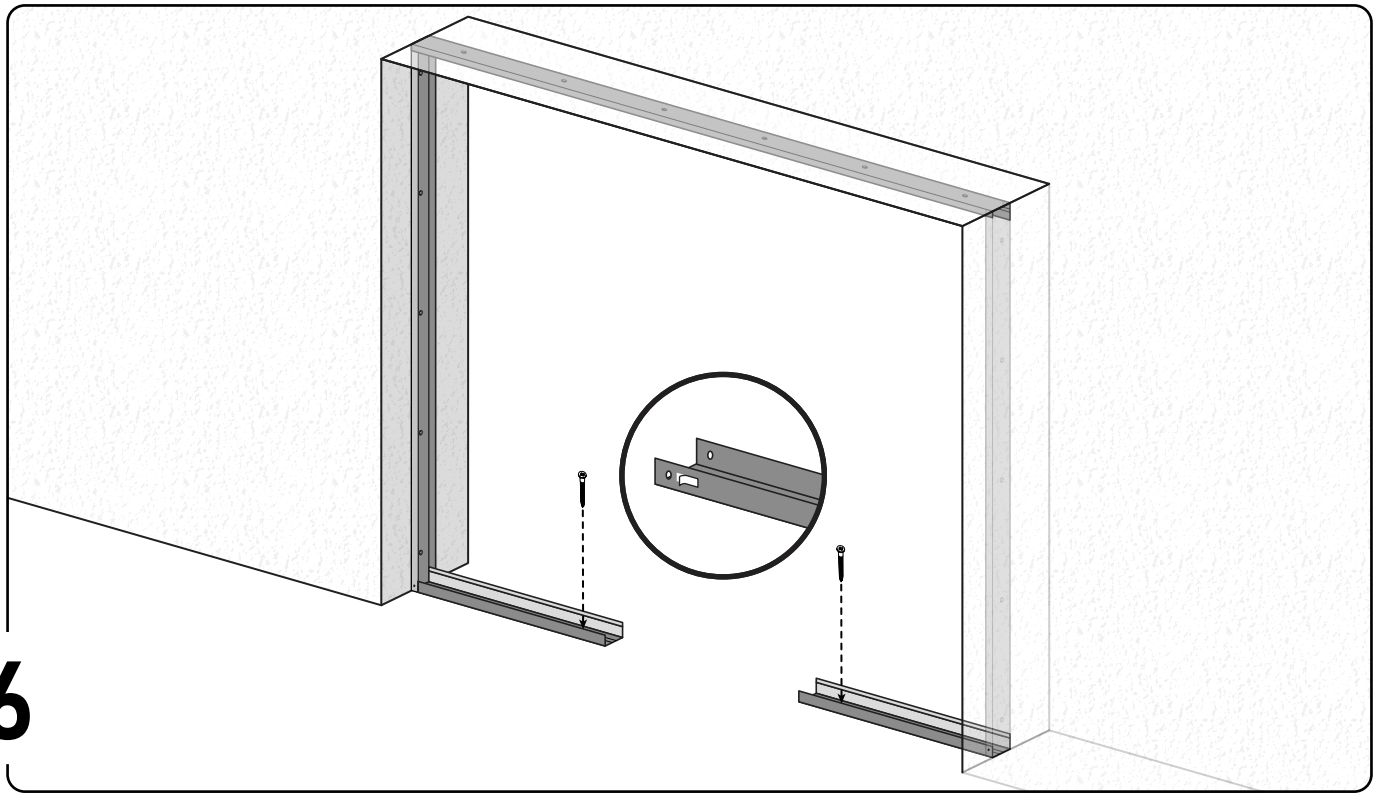

6

Once the bottom rail is correctly positioned and level, drill it down and secure it to the floor using the appropriate fixings. Check the inset detail to confirm the fixing bracket is properly seated before tightening.

+44 1603 380367 hello@patishon.com

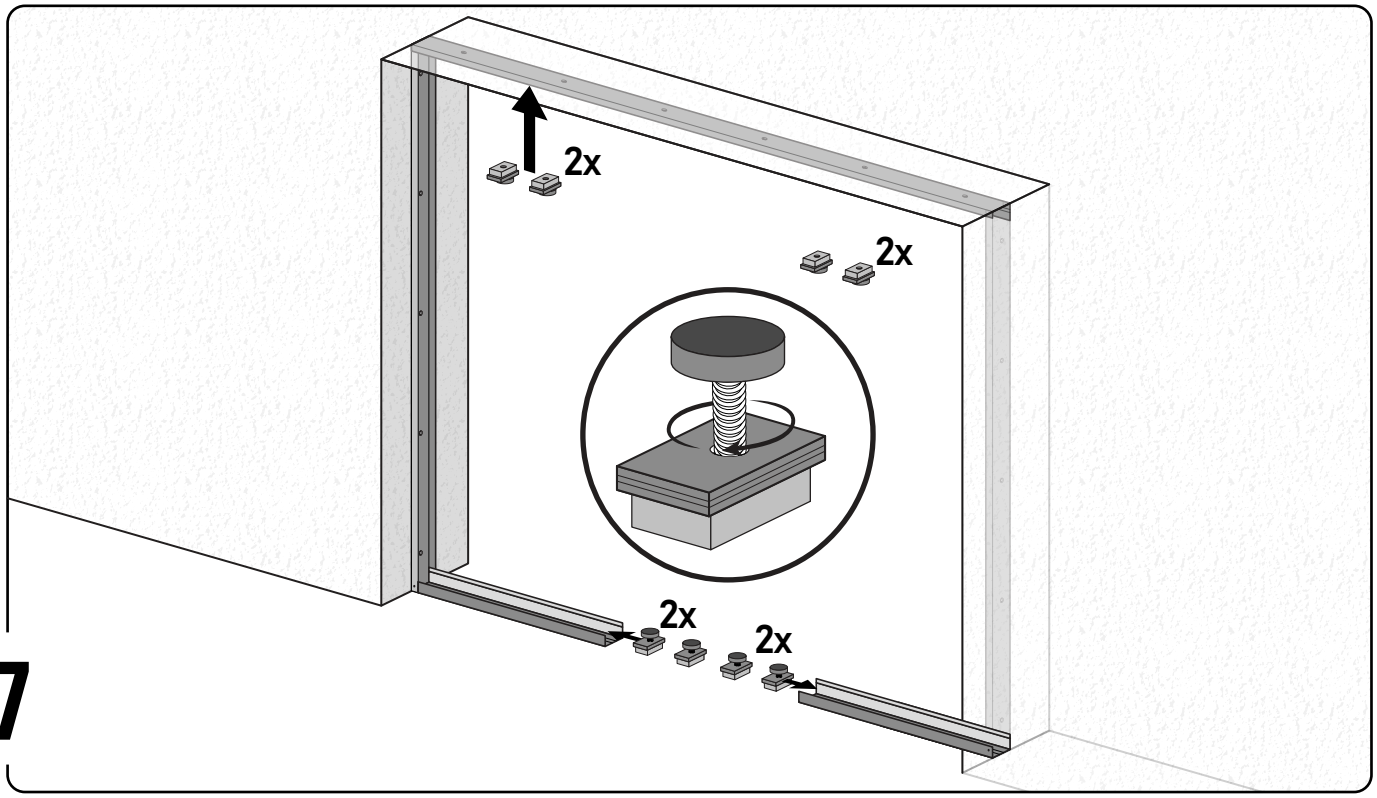

7

Insert the roller units into both the top and bottom tracks. Place 2 rollers at each corner position (total of 8 rollers across all positions). At this stage, tighten the roller wheel adjustment screw on each unit to hold them in place during panel installation.

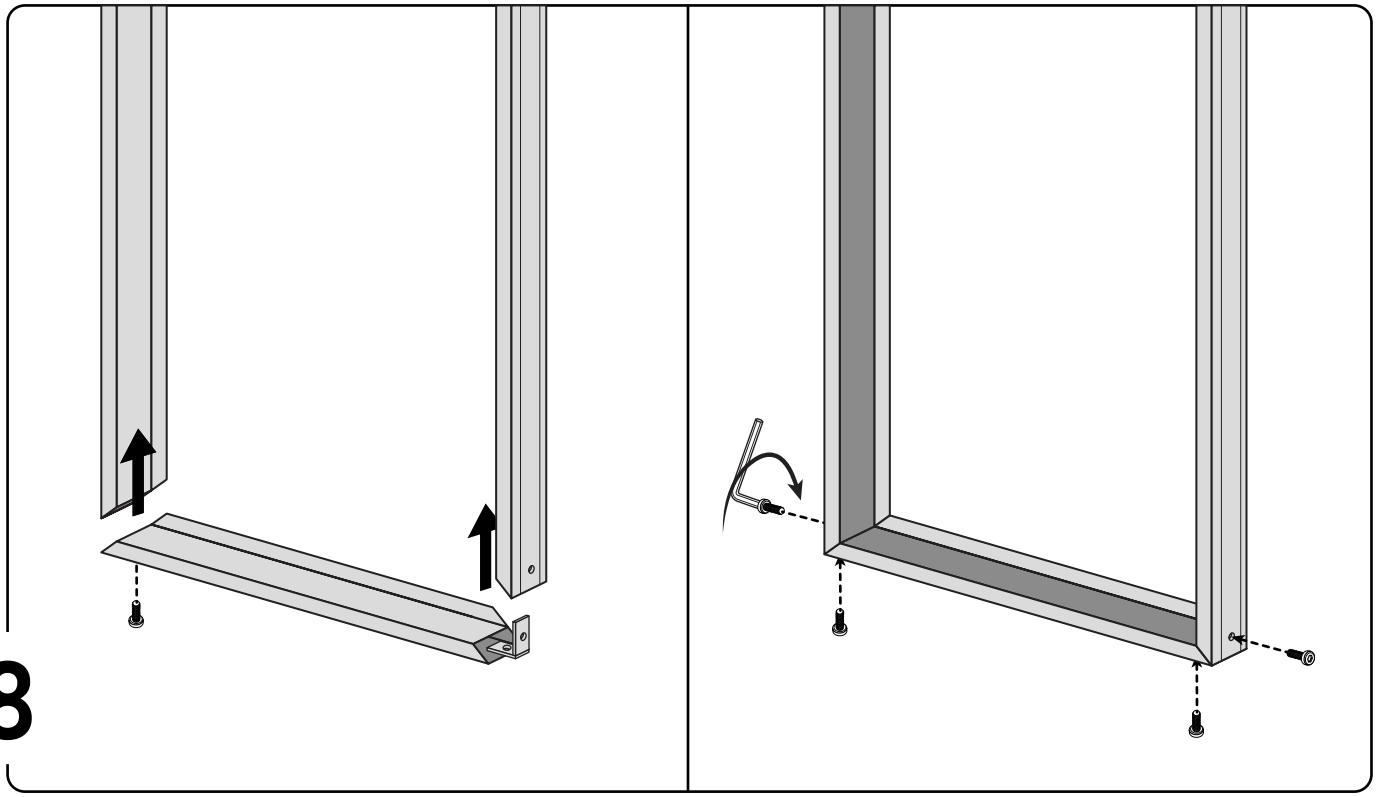

8

Lay the door frame components flat on the floor. Join the corner sections using the corner brackets provided, securing each bracket with the screws and Allen key supplied. Once all four corners are connected, check that the frame is square before standing it upright.

+44 1603 380367 hello@patishon.com

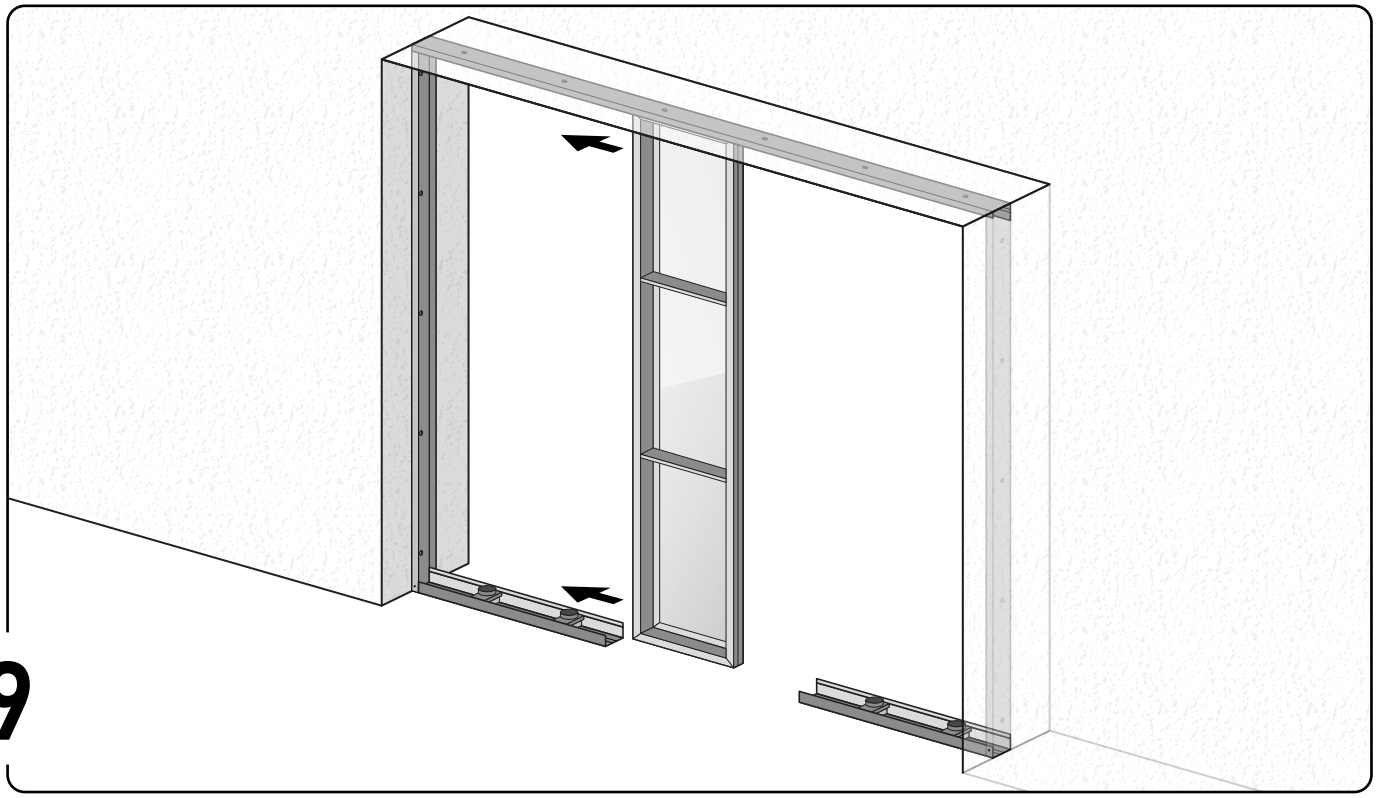

9

Starting from one end of the opening, slide the first fixed panel into the top and bottom tracks. Fit one fixed panel first, then position the door frame alongside it before inserting any additional fixed panels.

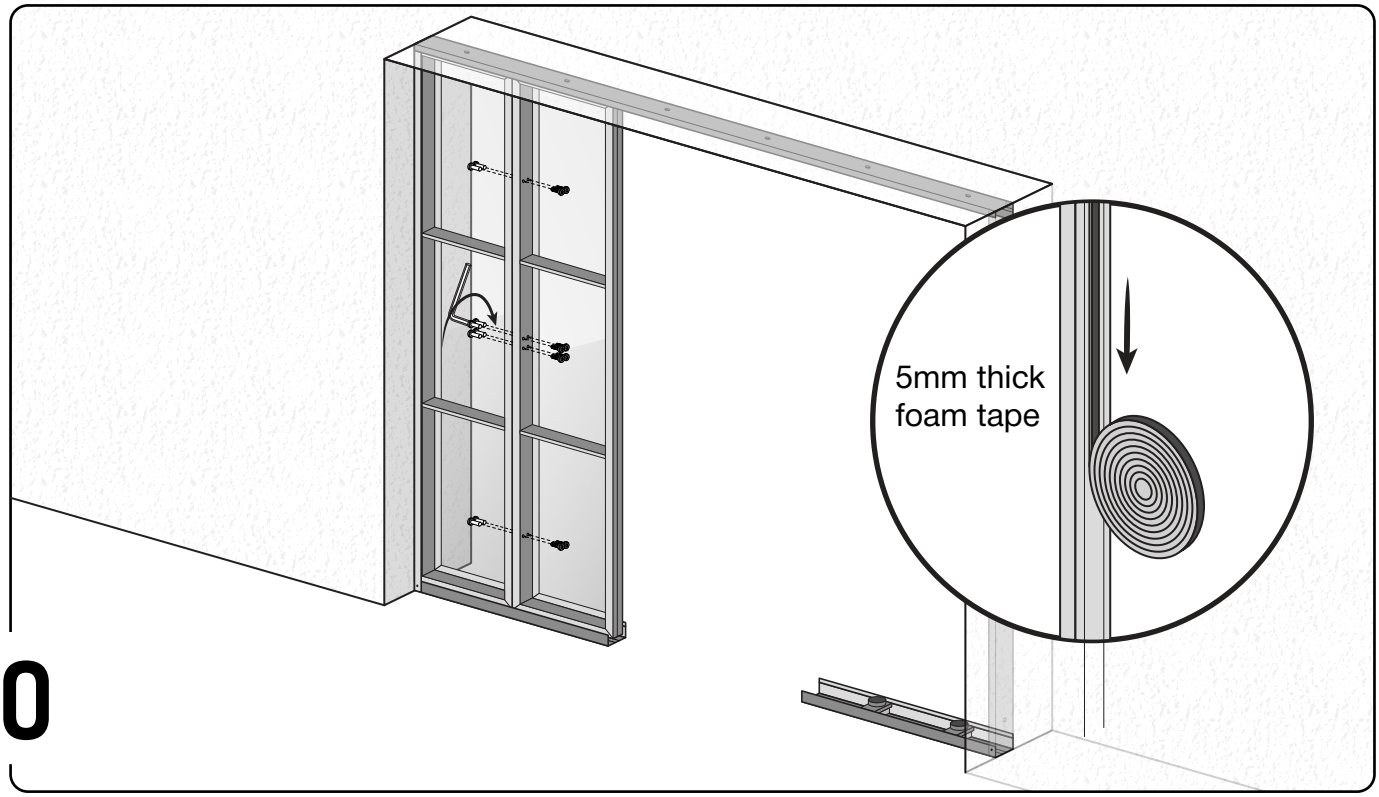

10

Where two fixed panels meet side by side, apply a strip of 5mm thick foam tape down the full height of the joint between them. Once the tape is in place, secure the panels together by driving screws through the joint at regular intervals.

+44 1603 380367 hello@patishon.com

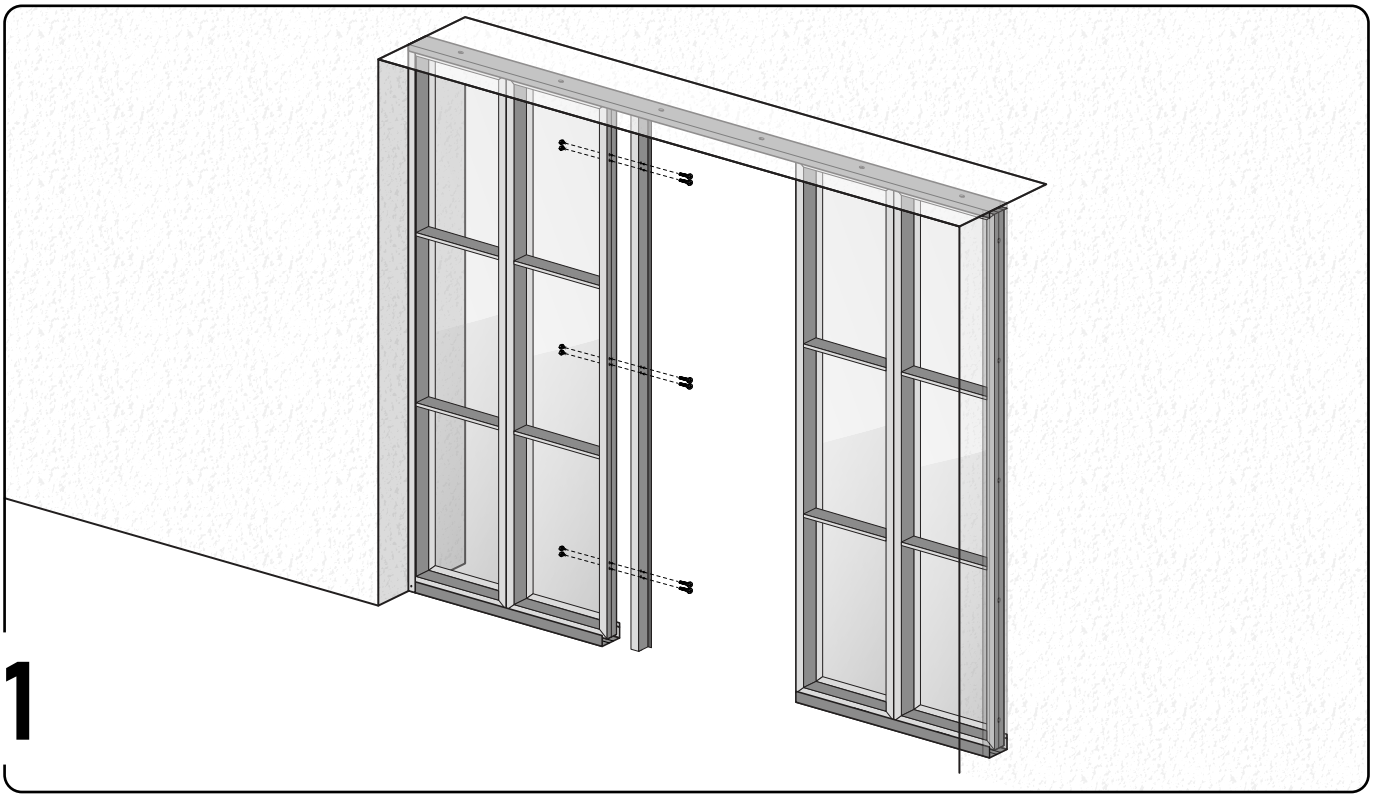

11

Position the door stopper panel against the fixed panel at the door opening edge. Secure it using the screws and bolts provided, fixing through both panels to create a firm stop point for the door when closed.

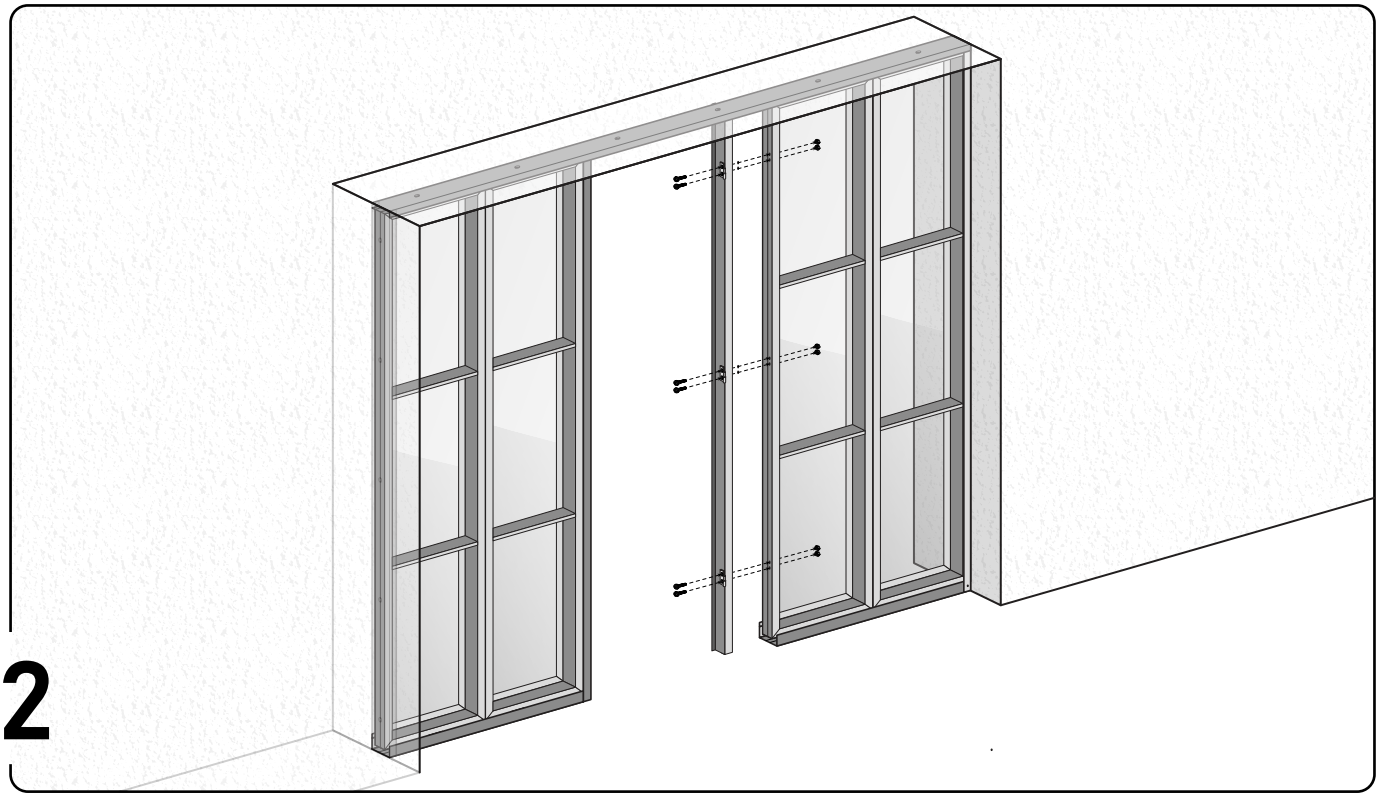

12

Bolt the hinges through the door frame. Start with the middle hinge first, then work outwards to the top and bottom hinges. After all three hinges are bolted in place, verify that the top of the door frame sits level before fully tightening all hinge bolts.

+44 1603 380367 hello@patishon.com

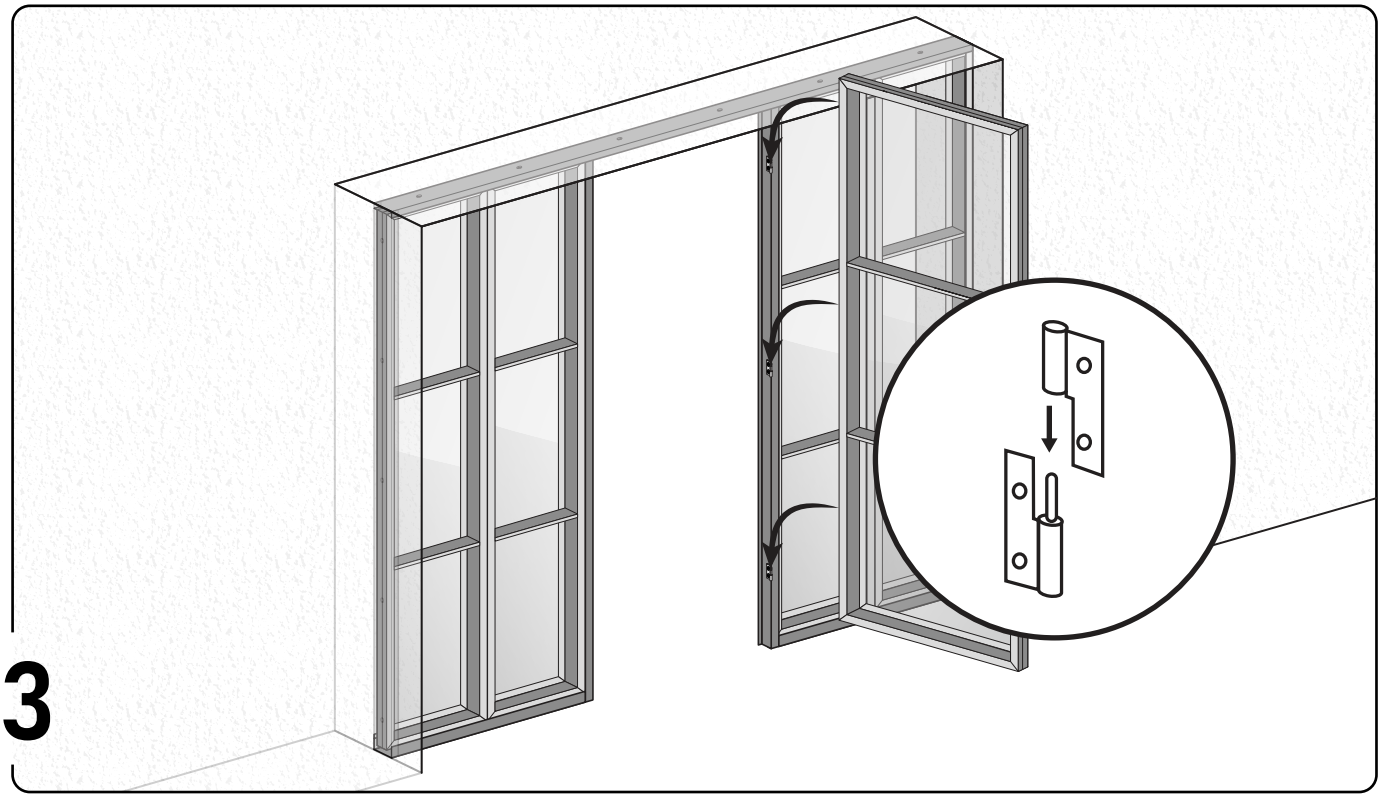

13

Lift the assembled door panel and engage the hinge pins. Drop the upper pin into the top hinge socket first, then align and engage the lower hinge. Ensure all hinge pins are fully seated before releasing the door.

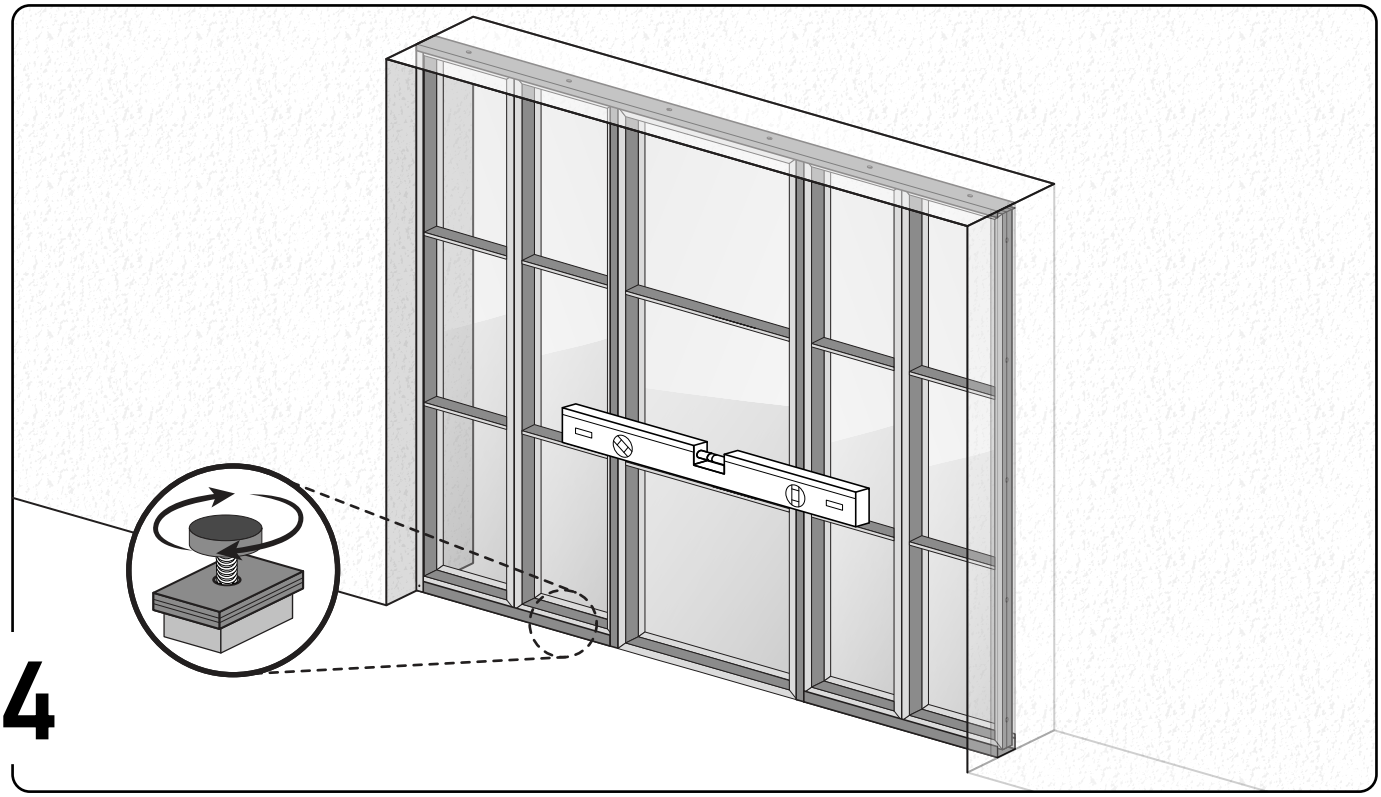

14

Open and close the door to check that all panels are level and move smoothly. If any panel sits too high or too low, adjust it by turning the roller wheel adjustment screw — tighten to raise, loosen to lower. Recheck alignment after each adjustment.

+44 1603 380367 hello@patishon.com

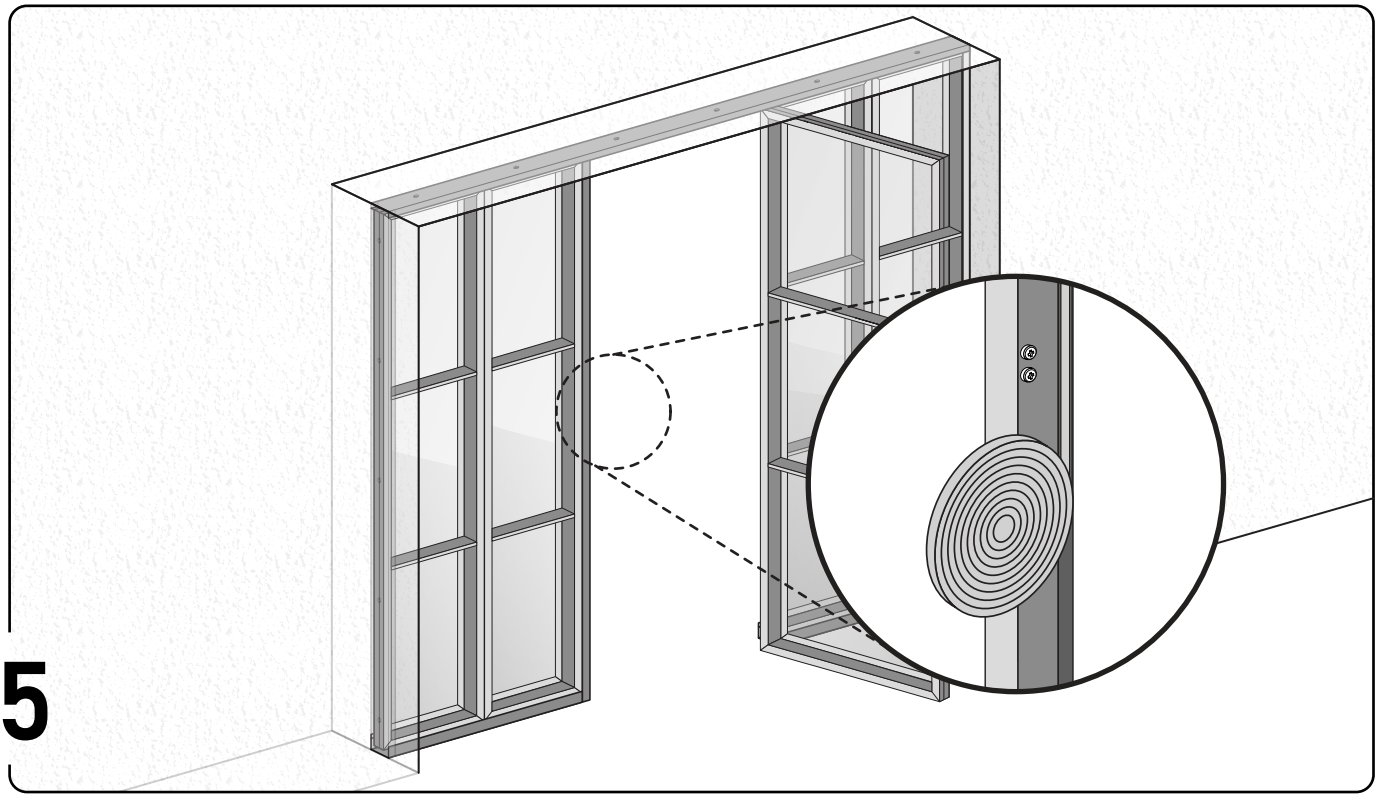

15

Apply a strip of rubber tape along the full height of the door stopper panel on the side that the door closes against. This creates a cushioned seal that reduces impact noise when the door is closed and protects both the door and stopper surfaces from wear.

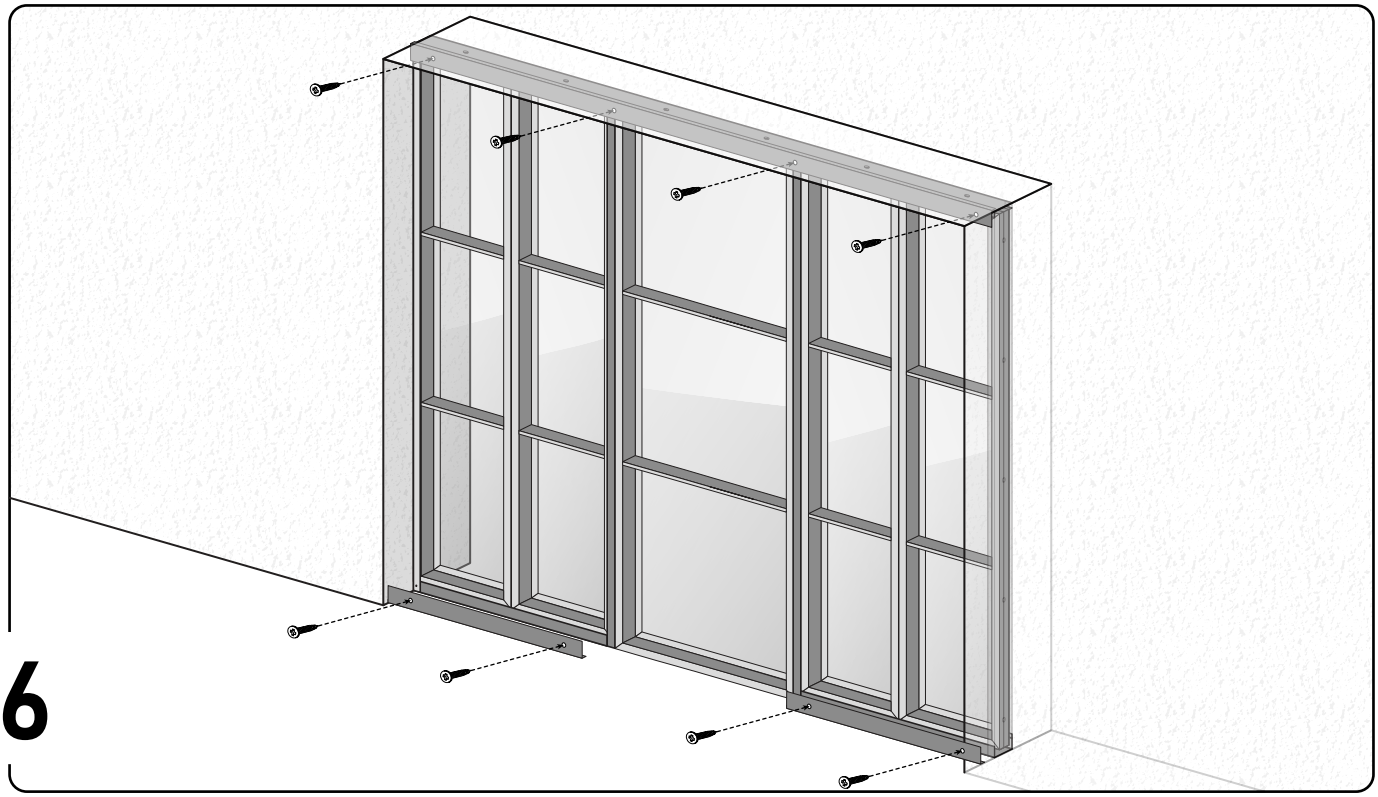

16

Slide the cover brackets into place over the top and bottom track ends to conceal the internal components and fixings. If any unused holes are visible on the frame or tracks, press rubber stoppers into them to give a clean, finished appearance. Installation is now complete.

+44 1603 380367 hello@patishon.com

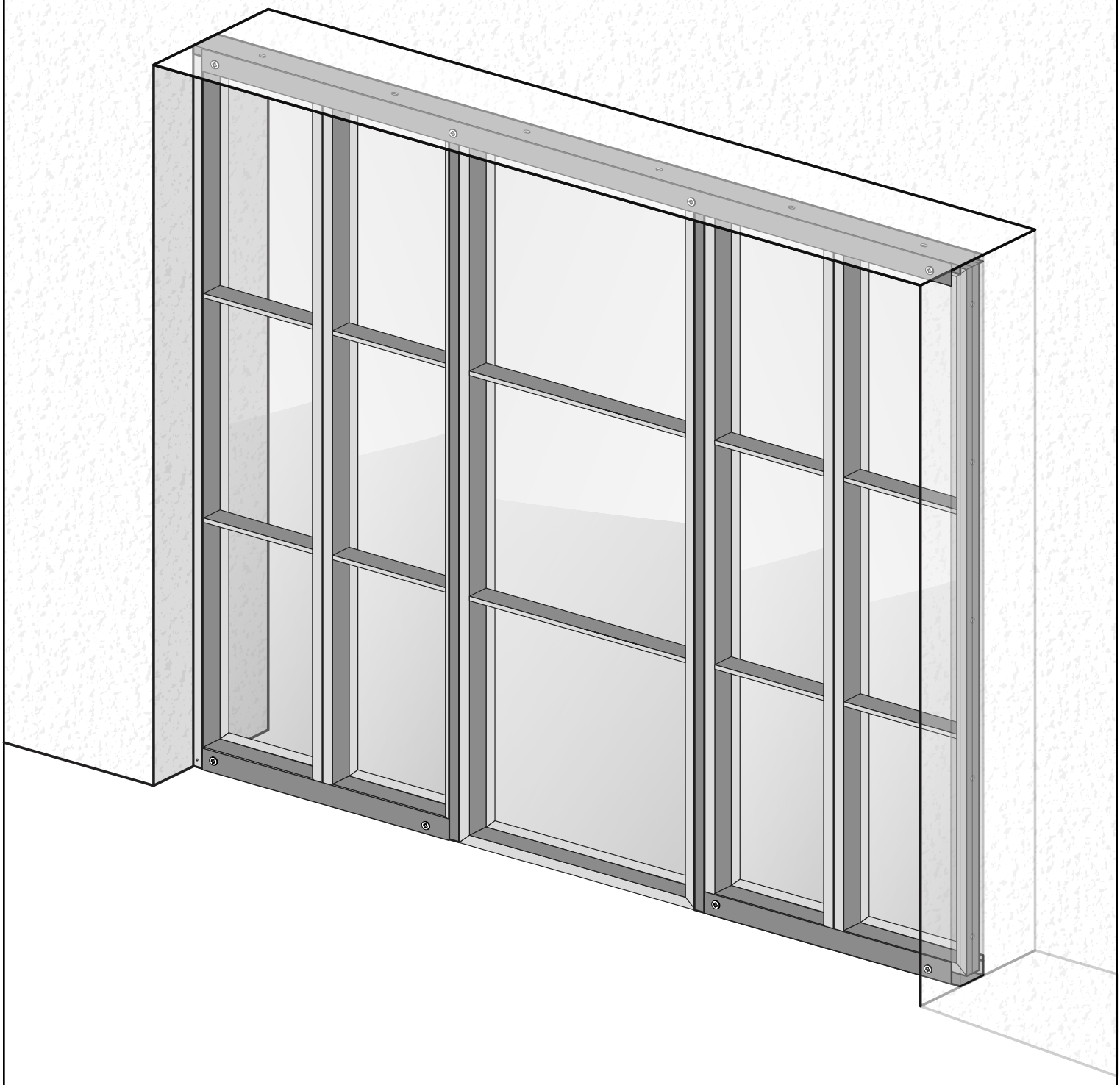

+44 1603 380367 hello@patishon.com