LUMETEC
BALCONY SOLAR MOUNTING SYSTEM

INSTRUCTION MANUAL

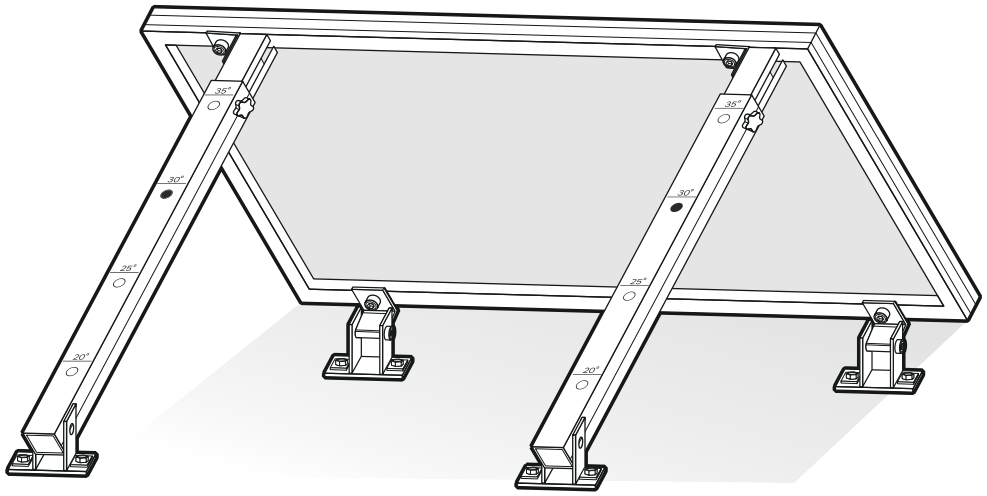

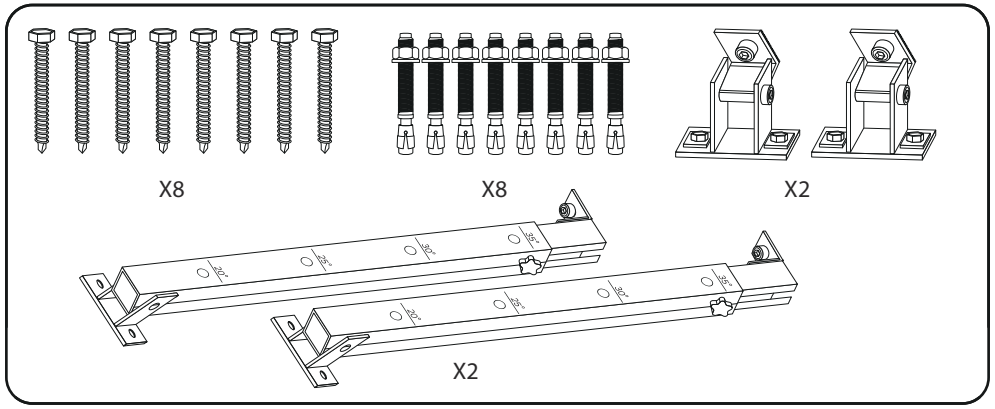

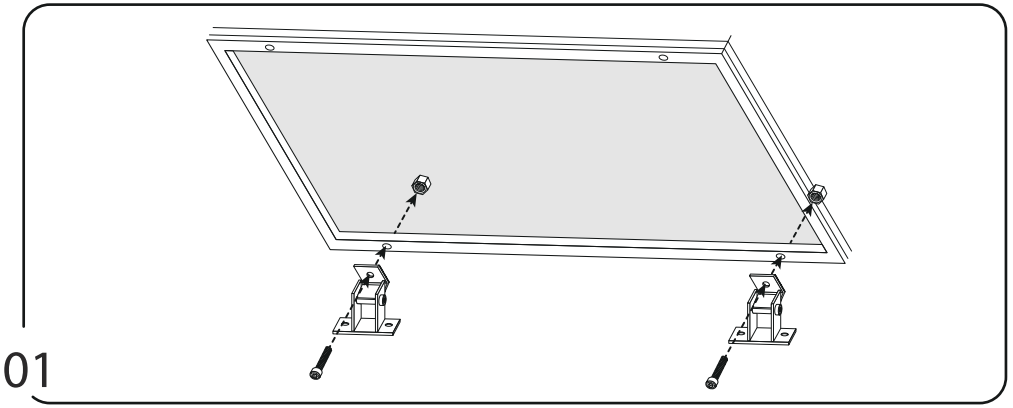

01

Step 1: Attach Solar Panel to Front Legs: Align panel with front legs. Secure using provided screws and Allen keys. Snug fit only - avoid over-tightening.

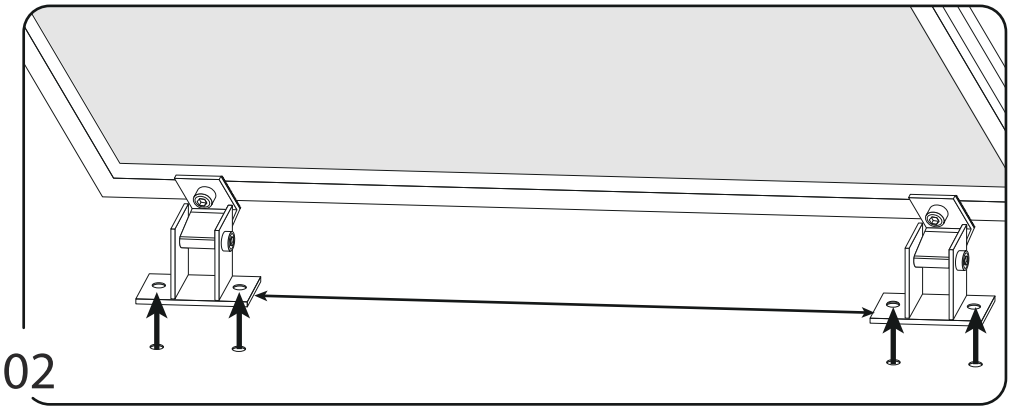

02

Step 2: Measure and Mark Positions: Measure the required distance between legs as per specifications. Mark exact installation points on the ground.

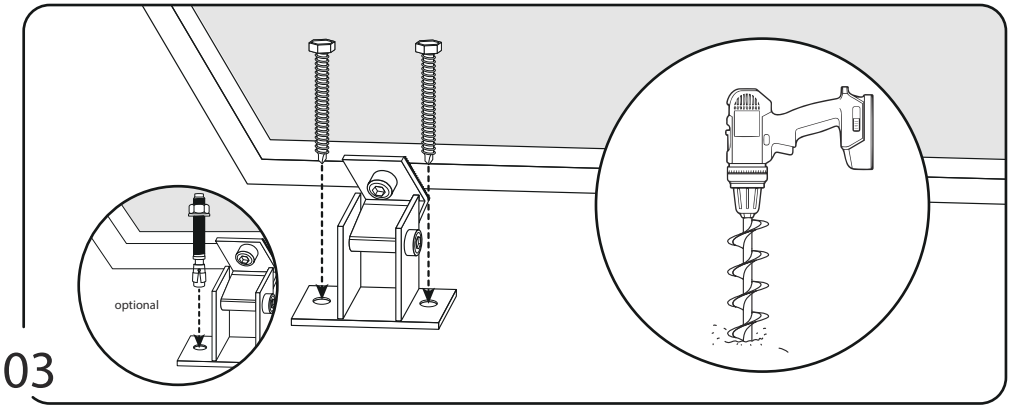

03

Step 3: Install Front Legs: Drill holes at marked positions. Insert anchors and secure both front legs. Ensure legs are vertical.

Optional: The legs can be installed optionally using anchors and bolts for added stability.

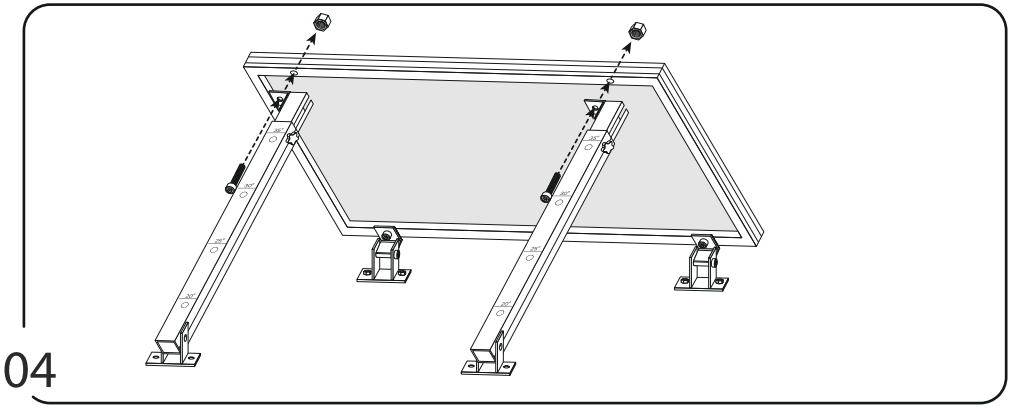

04

Step 4: Attach Solar Panel to Back Legs: Secure panel to back legs using screws/Allen keys. Set back legs at 30-degree angle (first position).

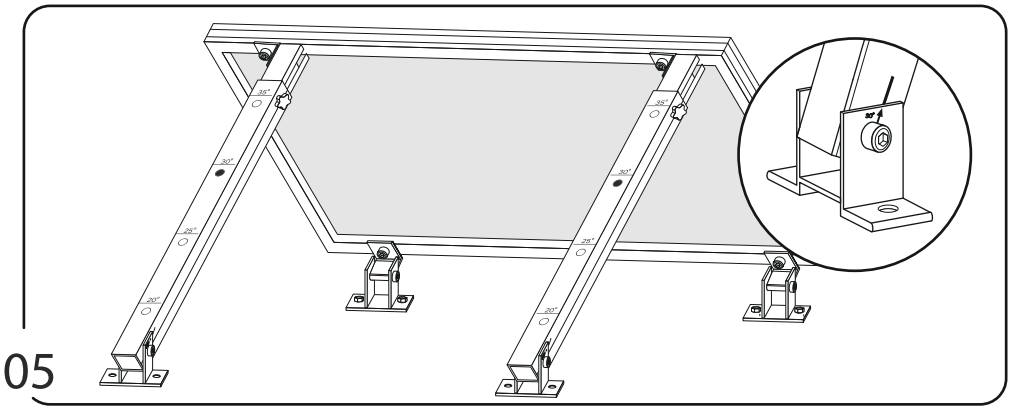

05

Step 5: Install Back Legs: Drill holes, insert anchors, and secure both back legs. Confirm all connections are tight. It will create 30 degree angle at first position.

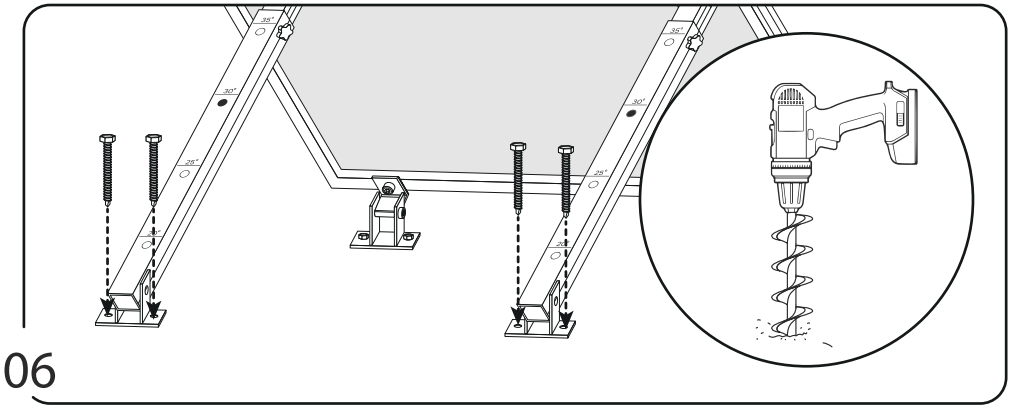

06

Step 6: Secure Back Legs: Drill holes and install the back legs on the ground. Secure them with anchors. Repeat for the second back leg.

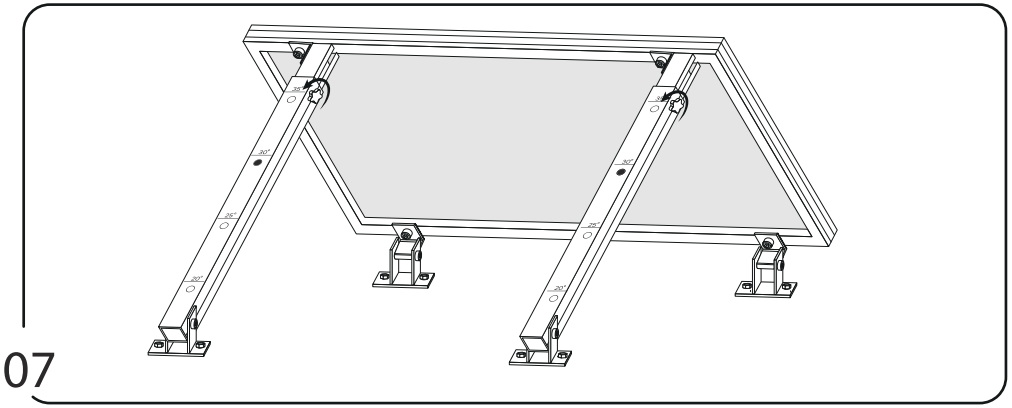

07

Adjust Second Leg Angle: Loosen thumb screw to unlock. Adjust angle as needed, then firmly retighten screw.

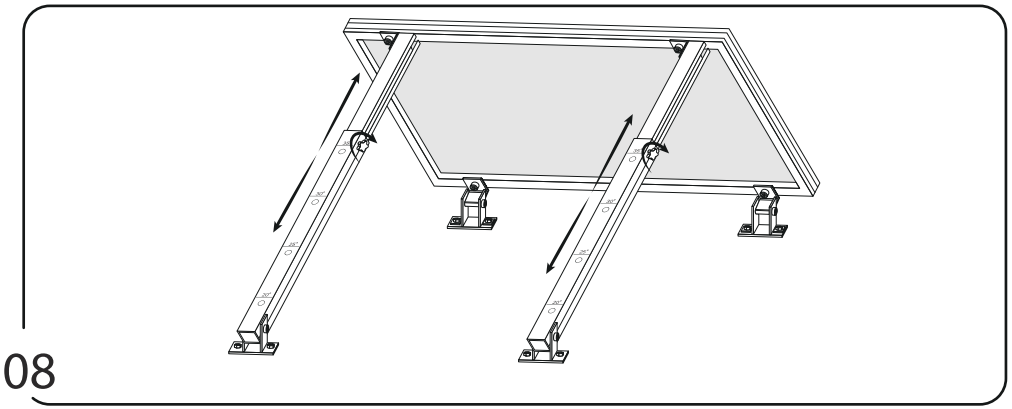

08

Step 8: Adjust Final Angle: Adjust the back angle to your desired position. Tighten all screws when complete.

SAFETY AND WARNING NOTES:

Personal Protection:
Always wear ANSI-approved safety goggles and work gloves. Use ear protection when operating power tools. Wear sturdy, closed-toe shoes with slip-resistant soles

Tool Safety:
Verify all power tools are in good working condition. Use only manufacturer-recommended drill bits and anchors. Ensure proper torque settings (8-10 Nm) for all fasteners

Panel Handling:
Minimum two-person lift required for solar panel installation. Never lift panel by glass surfaces - only handle by the frame edges. Use protective padding when placing panel on surfaces

Electrical Safety:
Ensure all electrical connections are properly insulated. Verify grounding of all metal components. Do not install during wet conditions or thunderstorms

Structural Safety:
Check for underground utilities before drilling. Verify all anchors are properly secured.