kloukaa

Book Shelf Instruction Manual

PARTS LIST

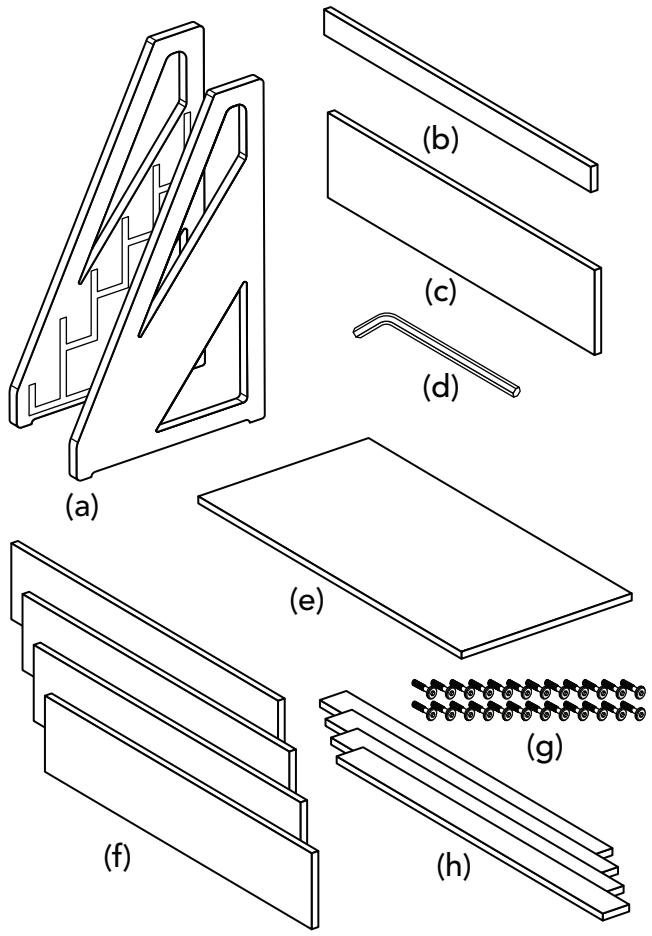

Please ensure all parts are included before starting assembly.

INSTRUCTION MANUAL

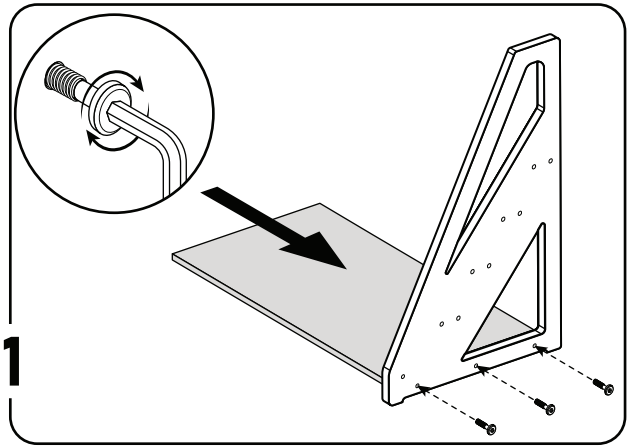

Attach the side panel(a) with the base panel (e) using the provided screws (g). Tighten gently at first.

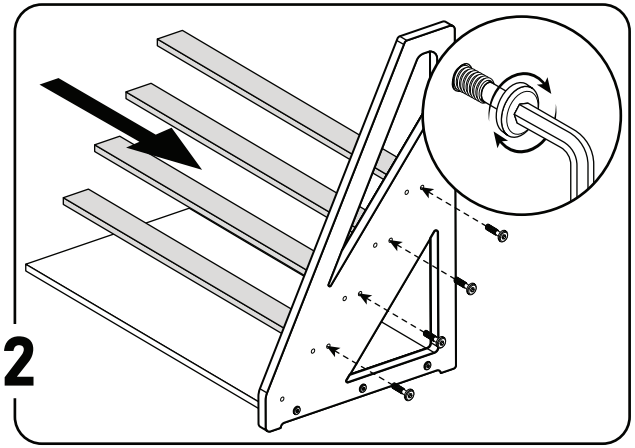

Attach the shelf bases(h) with the side panel(a)using the provided screws (g). Tighten gently at first.

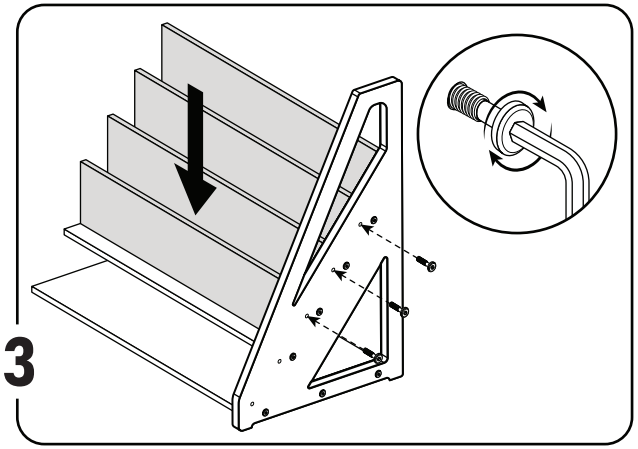

Attach the shelfs back(f) with the side panel(a) using the provided screws (g). Tighten gently at first.

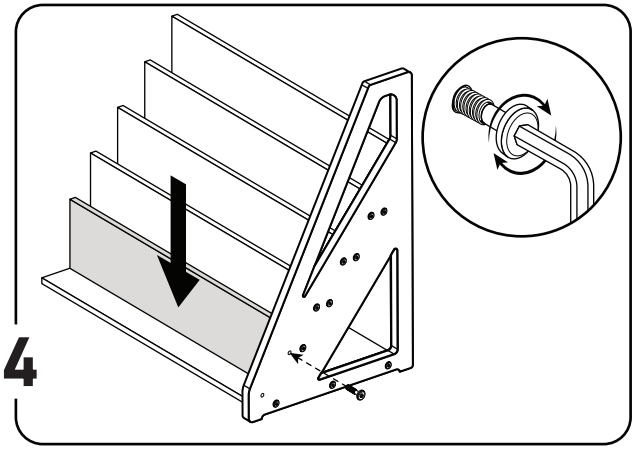

Attach the bottom shelf back(c) with the side panel(a) using the provided screws (g). Tighten gently at first.

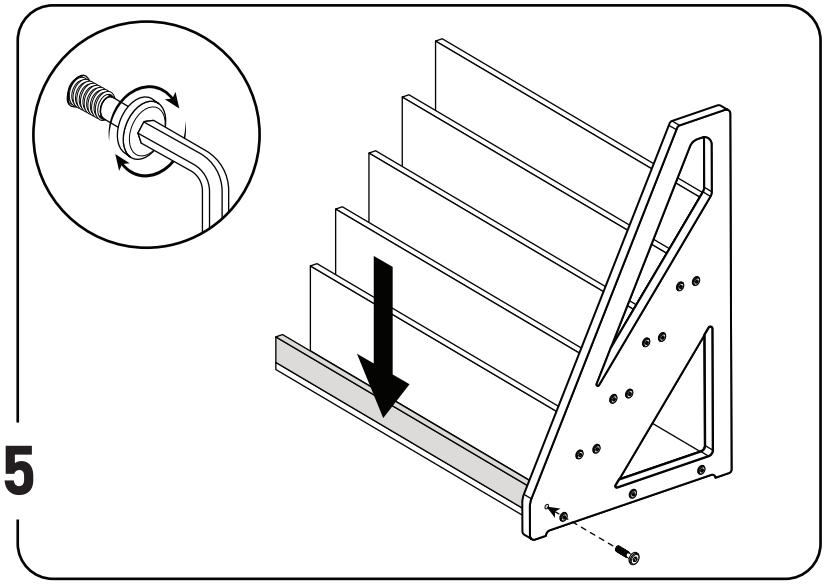

5

Attach the front panel (b) with the side panel(a) using the provided screws (g). Tighten gently at first.

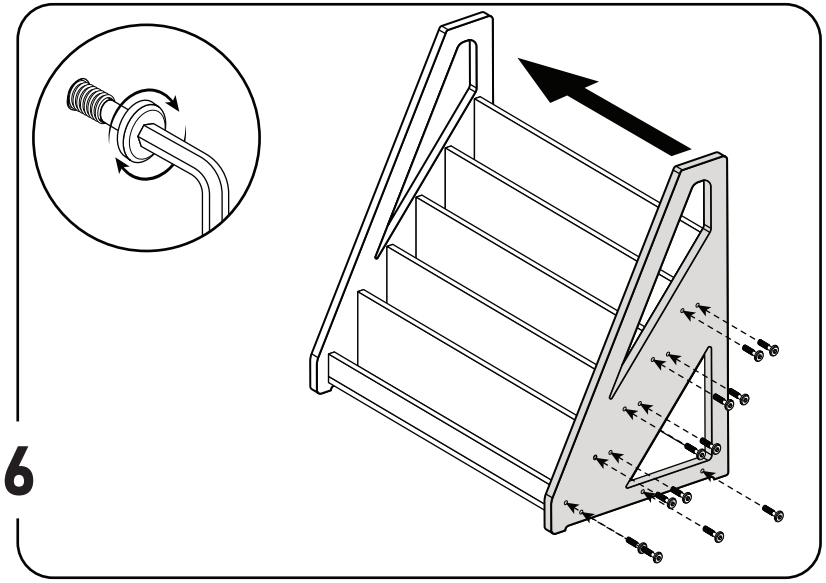

6

Attach second side panel (a) with assembled structure the screws using the provided screws (g). Tighten gently at first.

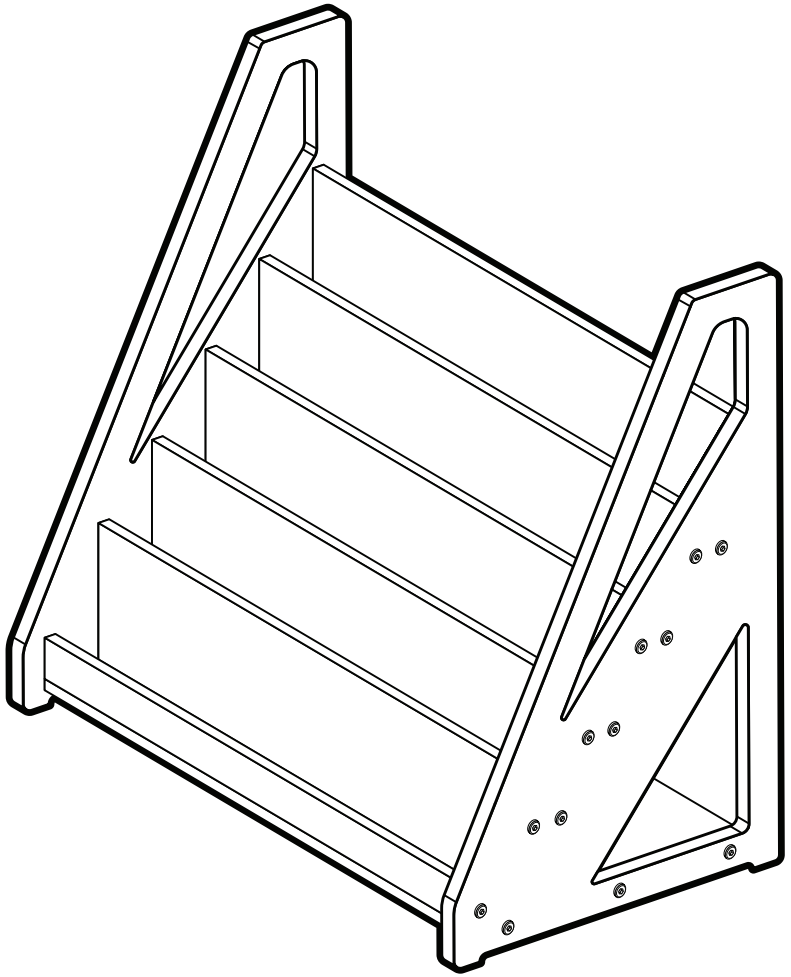

Care Instructions

Clean with a soft, damp cloth. Avoid harsh chemicals. Keep away from direct sunlight and excessive moisture. Check screws and fittings regularly to ensure stability.

Warnings

For safety, please read carefully before use: Only use this product for its intended purpose. Keep small parts away from children during assembly. Ensure the product is placed on a flat, stable surface. Do not overload or place excessive weight on the product. Dispose of packaging materials safely to avoid choking hazards.