SLIDING CLOSET DOOR

INSTALLATION MANUAL

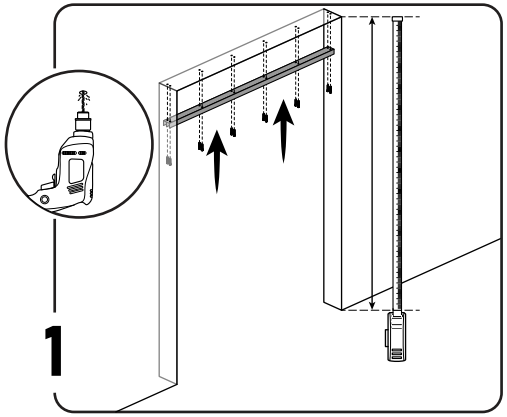

Attaching the ceiling rail:
Check that the rail is the correct length. Drill screw holes for the rail (about 50 cm apart). Screw the rail in place, use low profile screws.

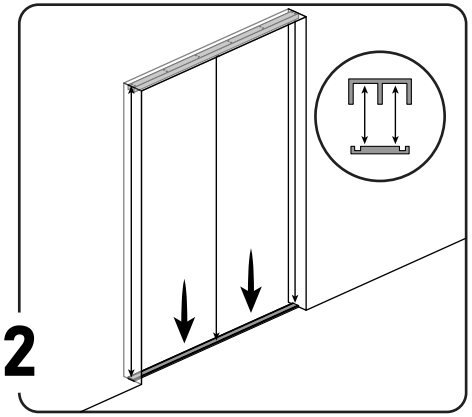

Aligning the bottom rail to place:
Lift the rail to place, do not attach yet. The groove in the bottom rail should be centered on the top rail.

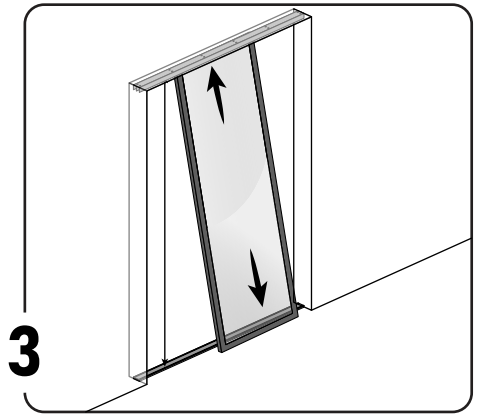

Lift only one door onto the rail with the top edge first. The door will be used to align the bottom rail properly and will be lifted off.

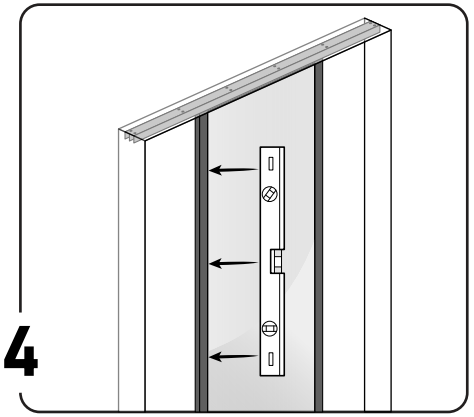

Use a spirit level to adjust the door so that it is straight.
a.Lift the door off of the rail now.

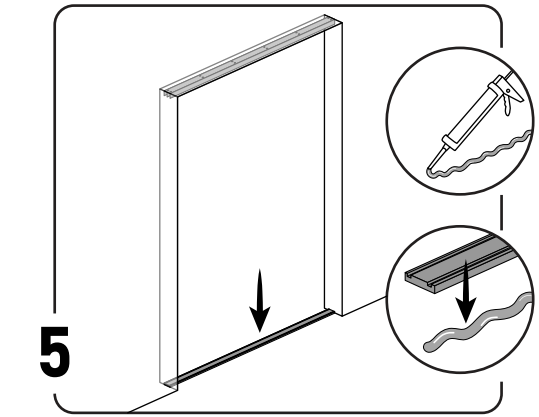

Glue the bottom rail in place.

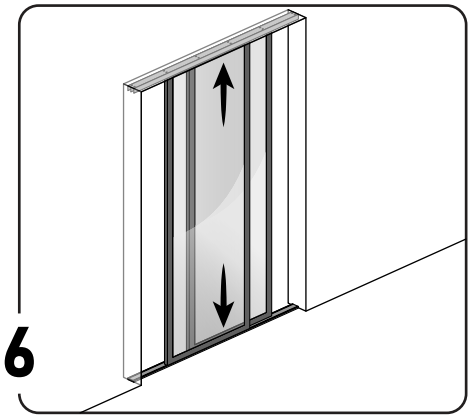

Lift all the doors to the rails.

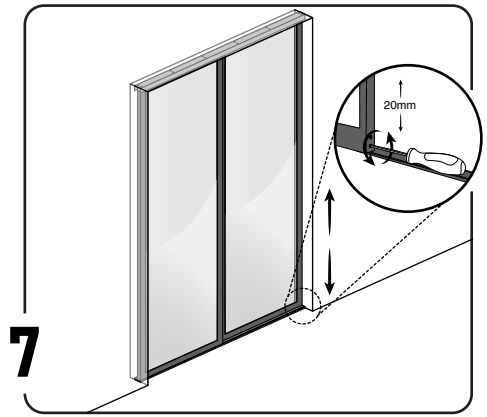

The height and straightness of the doors can be adjusted with the screws at the ends of the door. The wheels can be raised up to 20 mm, but the actual adjustment range depends on the straightness of the structures at the site.

TOOLS REQUIRED

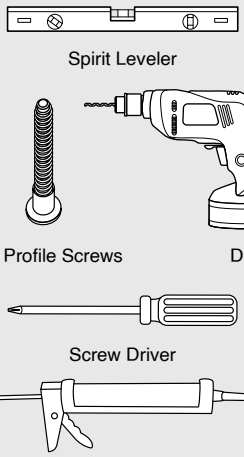

WARNING

- Handle all glass door panels with extreme care. Glass edges can cause injury if not lifted properly.
- Always wear safety gloves, closed shoes, and protective eye wear during installation.
- Ensure the ceiling rail and bottom rail are installed on solid, stable, and level surfaces. Improper installation may cause the door to derail or fall.
- Do not force the doors into the rails. Excessive pressure may crack the glass or damage the wheel assembly.
- Keep children and pets away from the installation area at all times.
- Do not lean glass panels against unstable surfaces. They may tip over and shatter.
- Make sure all screws and fasteners are securely tightened before using the door. Loose hardware can lead to malfunction or accidents.
- Avoid standing directly under any door panel while lifting or adjusting it.

CARE & MAINTENANCE

- Clean the glass panels regularly using a soft cloth and mild, non-abrasive cleaner. Avoid harsh chemicals that may damage the surface.
- Keep the upper and lower rails free from dust, sand, or debris to ensure smooth sliding.
- Lubricate wheel mechanisms periodically using a silicone-based lubricant. Do not use oil-based products, as they may attract dust.
- Inspect screws, rail alignment, and wheel tension every few months. Tighten or adjust if needed.
- Avoid slamming or pushing the doors with excessive force. This may damage the wheels or misalign the rails.
- Do not hang heavy objects on the door frame or glass.
- If any cracks, chips, or unusual noises occur, stop using the door immediately and inspect for damage or misalignment.

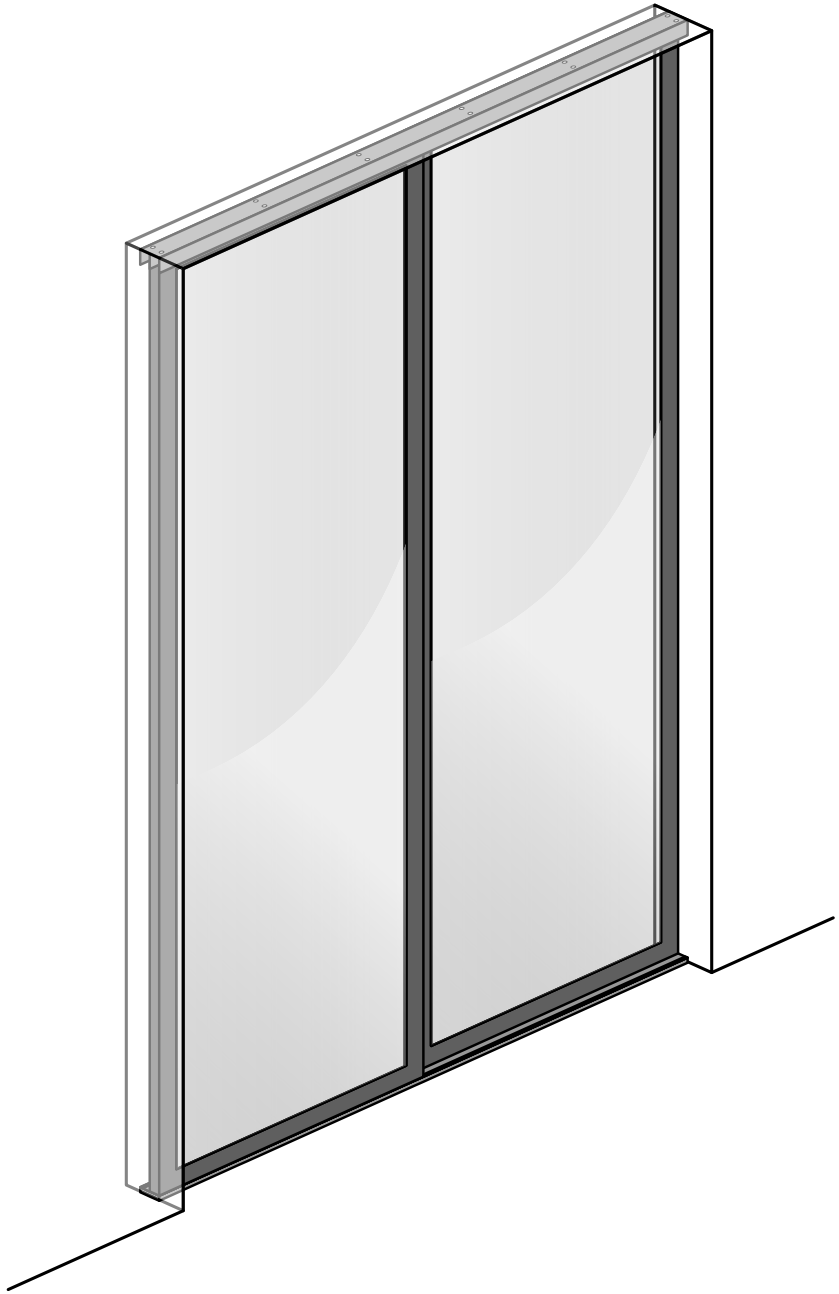

FIXED WALL AND A DOOR

INSTALLATION MANUAL

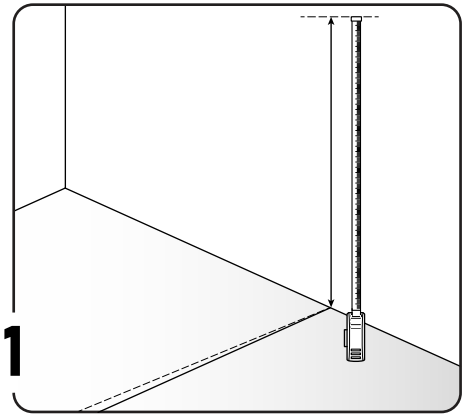

Measure and Mark:
Check the slope of the floor using a spirit level. Measure and calculate the required height for the bottom edge of the glass panel on the wall. Mark the reference line clearly.

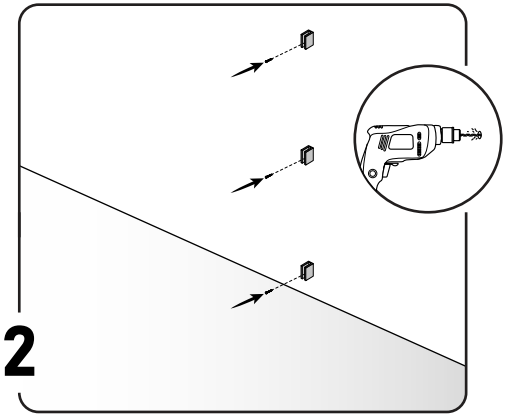

Install Wall Brackets
Insert and secure the wall brackets according to the marked reference line. Ensure each bracket is firmly fixed and level.

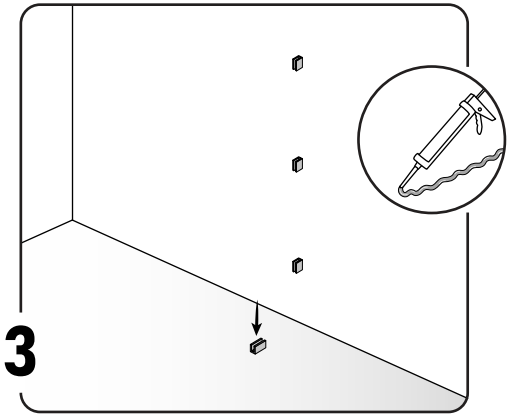

Install the Bottom Bracket
Apply a high quality construction adhesive to the bottom bracket. Position it accurately on the floor and press firmly into place. Allow the adhesive to set according to the manufacturer's instructions.

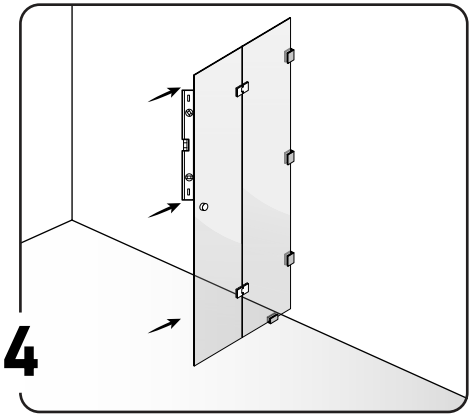

Install the Fixed Glass Panel
Carefully place the fixed glass panel into the installed wall and bottom brackets. Use a spirit level to confirm the glass is perfectly vertical and aligned.

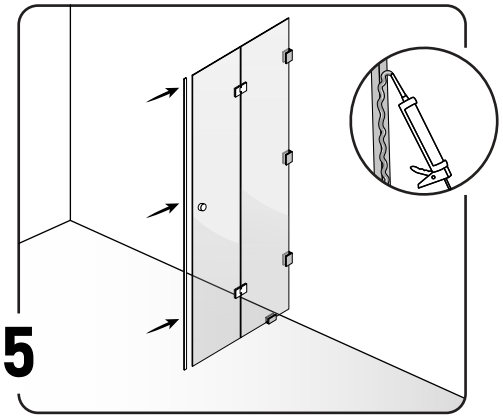

Attach the Front Bracket Cover
Once the glass panel is correctly positioned, attach the front bracket cover along the exposed edge of the glass

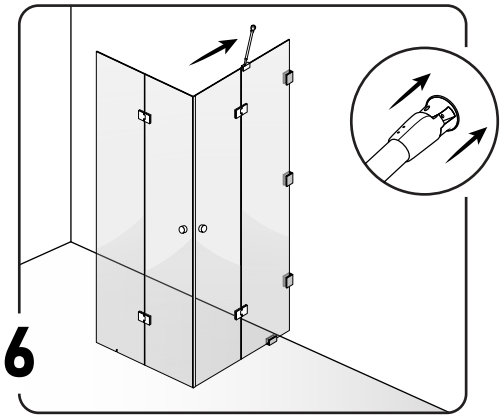

Install the Support Bar
After the fixed glass is secured, install the 45° support bar to provide additional stability.
Ensure all fasteners are tightened securely. Allow 24 to 48 hours for the floor fastener adhesive to cure completely.

TOOLS REQUIRED

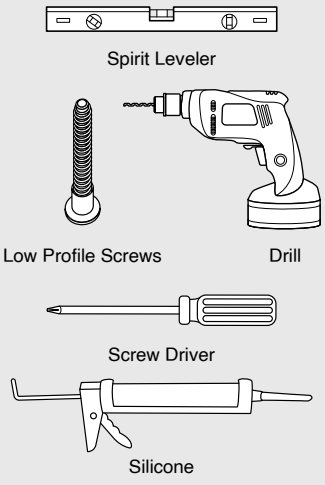

WARNING

- Handle all glass panels with extreme care. Glass edges are sharp and may cause injury.
- Always wear safety gloves, closed footwear, and protective eye wear during installation.
- Ensure all brackets and supports are fixed to solid, stable, and level surfaces.
- Never force the glass into position. Excessive pressure may cause cracking or damage.
- Keep children and pets away from the installation area at all times.
- Do not lean glass panels against unstable surfaces.
- Confirm all screws and fasteners are fully tightened before use.
- Avoid standing directly beneath the glass panel while positioning or adjusting it.

CARE & MAINTENANCE

- Clean glass regularly using a soft cloth and mild, non abrasive glass cleaner.
- Do not use harsh chemicals, abrasive pads, or acidic cleaners.
- Keep the floor and bottom bracket area free from dust and debris.
- Periodically inspect brackets, adhesive joints, and alignment.
- Do not apply excessive pressure to the glass.
- Do not hang heavy objects or accessories on the glass or fittings.
- If cracks, looseness, or unusual movement are detected, stop use immediately and consult a professional.

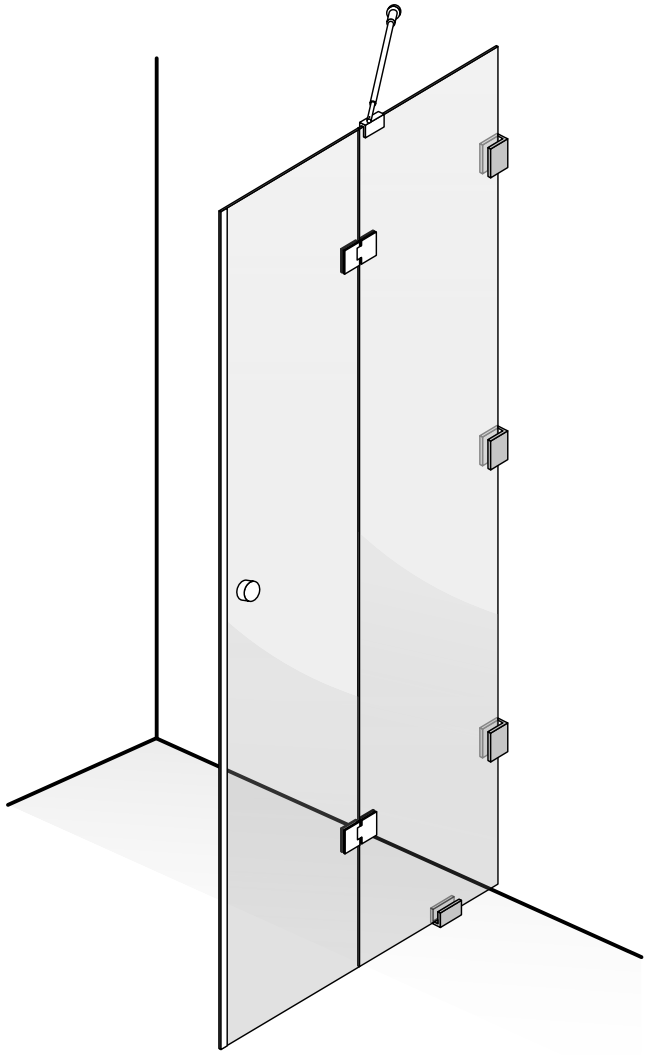

FIXED WALL WITH FRAMES

INSTALLATION MANUAL

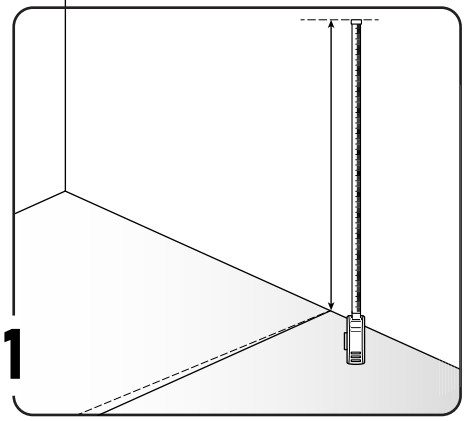

Measure and Mark:
Check the slope of the floor using a spirit level. Measure and calculate the required height for the bottom edge of the glass panel on the wall. Mark the reference line clearly.

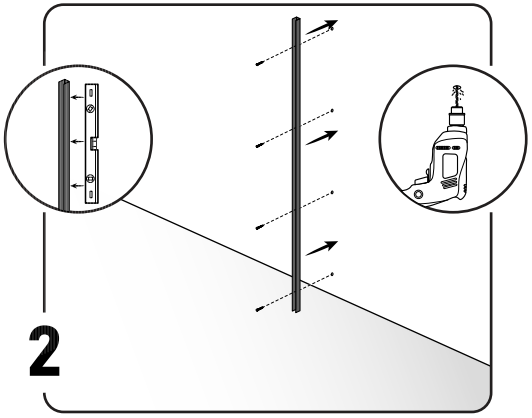

Install Wall Molding:
Position the wall molding at the marked height. Drill pilot holes and secure the wall molding using appropriate low-profile screws. Ensure it is straight and firmly fixed.

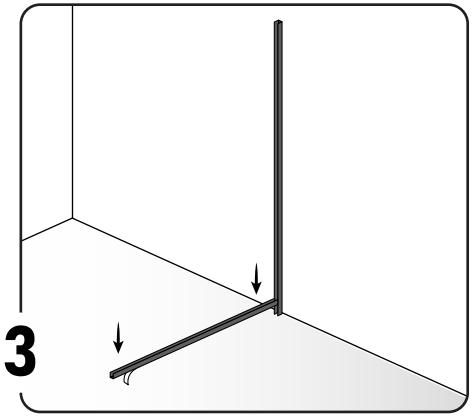

Fix Bottom Support:
Apply a high-quality construction adhesive evenly along the bottom support. Place it accurately on the floor according to the measured alignment. Allow sufficient bonding time.

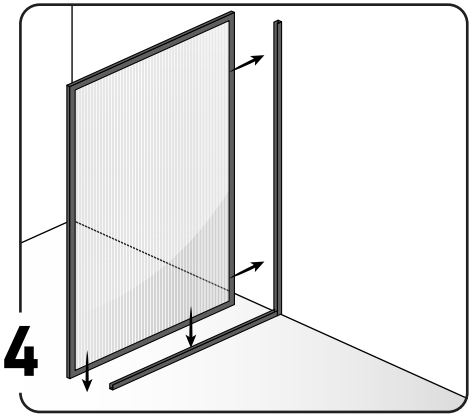

Test Fit the Wall Frame:
Carefully slide the fixed wall frame into position. Check alignment and ensure the frame fits correctly without force.

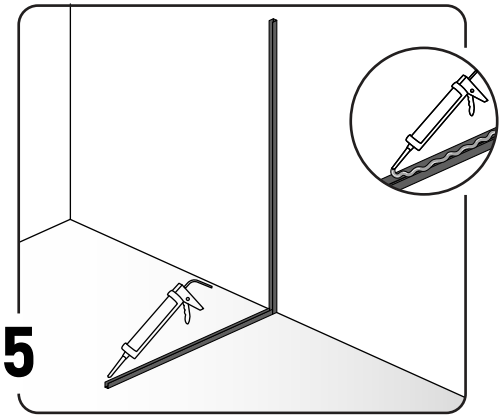

Final Assembly:
Apply adhesive to the bottom and side supports. Position the wall frame onto the supports and press gently to achieve a snug and stable fit. Recheck alignment and level before the adhesive sets.

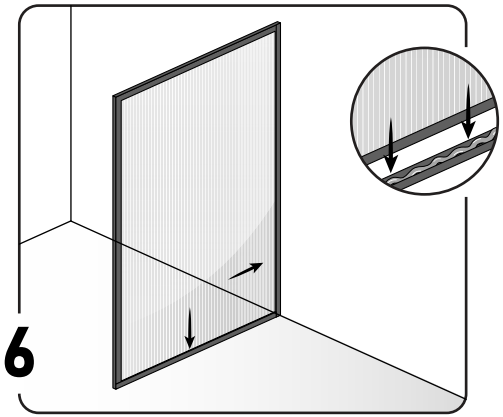

Final Inspection:
Allow proper curing time, then perform a final inspection to confirm stability, alignment, and secure fixing.

TOOLS REQUIRED

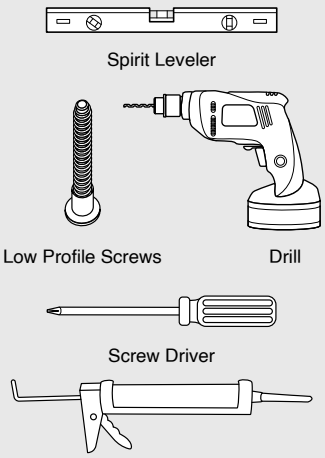

WARNING

- Handle all glass panels with extreme care. Glass edges are sharp and may cause injury if mishandled.
- Always wear safety gloves, closed footwear, and protective eye wear during installation.
- Ensure all supports and rails are installed on solid, stable, and level surfaces. Improper installation may result in failure or injury.
- Never force the glass frame into position. Excessive pressure may crack the glass or damage fittings.
- Keep children and pets away from the installation area at all times.
- Do not lean glass panels against unstable surfaces. They may tip over and shatter.
- Confirm that all screws and fasteners are securely tightened before use.
- Avoid standing directly beneath the glass panel while positioning or adjusting it.

CARE & MAINTENANCE

- Clean glass surfaces regularly using a soft cloth and mild, non-abrasive glass cleaner.
- Avoid harsh chemicals, abrasive pads, or acidic cleaners, as they may damage the glass or frame finish.
- Keep the bottom support area free from dust, sand, and debris to maintain stability and appearance.
- Inspect adhesive joints, screws, and frame alignment periodically to ensure long-term safety.
- Do not apply excessive force or pressure to the glass surface.
- Do not hang heavy objects or accessories on the glass or frame.
- If cracks, chips, looseness, or unusual movement are noticed, stop using the installation immediately and inspect or consult a professional.

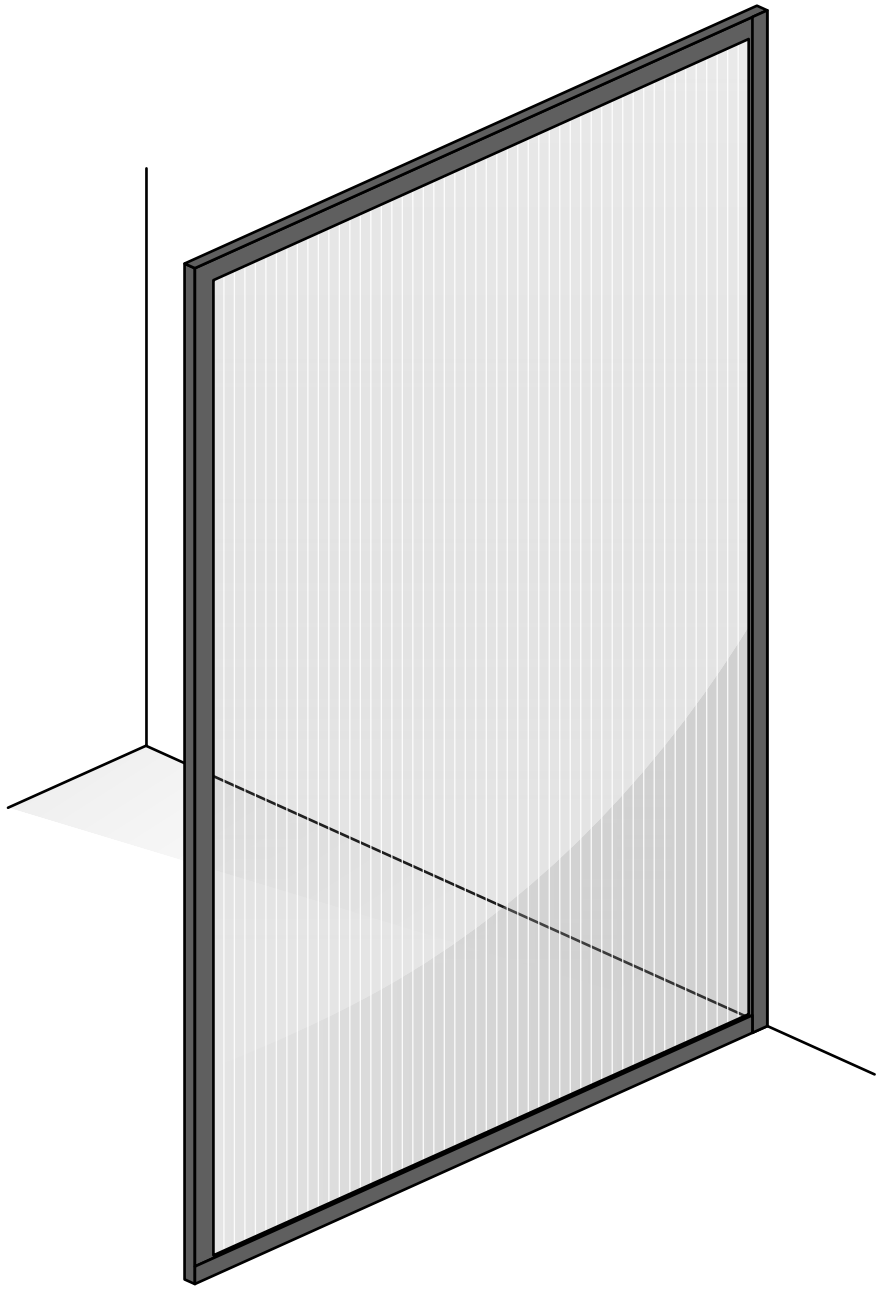

FIXED WALL, FIXED

INSTALLATION MANUAL

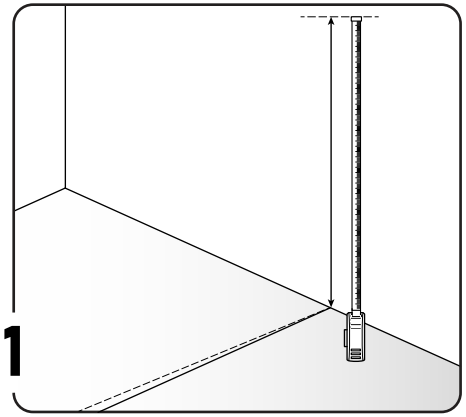

Measure and Mark:
Check the slope of the floor using a spirit level. Measure and calculate the required height for the bottom edge of the glass panel on the wall. Mark the reference line clearly.

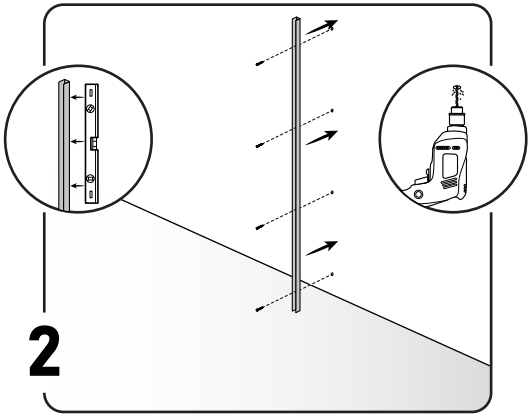

Install Wall Molding:
Position the wall molding at the marked height. Drill pilot holes and secure the wall molding using appropriate low-profile screws. Ensure it is straight and firmly fixed.

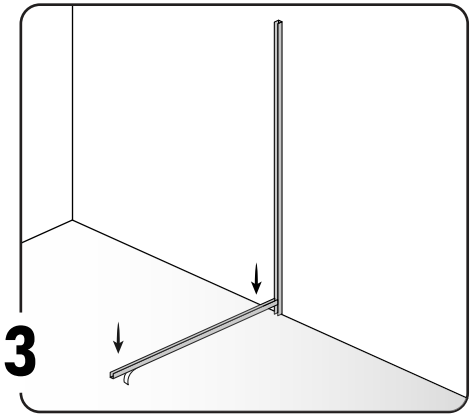

Fix Bottom Support:
Apply a high-quality construction adhesive evenly along the bottom support. Place it accurately on the floor according to the measured alignment. Allow sufficient bonding time.

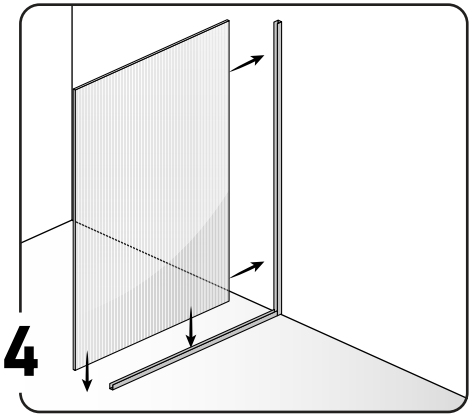

Test Fit the Wall Frame:
Carefully slide the fixed wall frame into position. Check alignment and ensure the frame fits correctly without force.

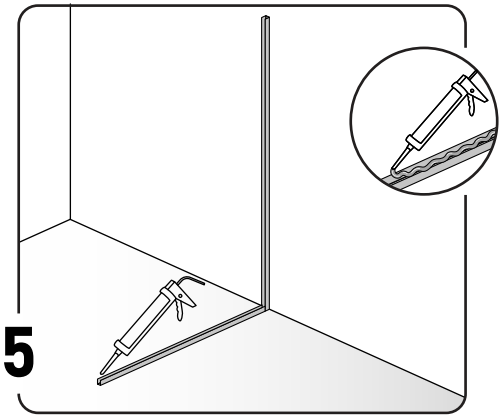

Final Assembly:
Apply adhesive to the bottom and side supports. Position the wall frame onto the supports and press gently to achieve a snug and stable fit. Recheck alignment and level before the adhesive sets.

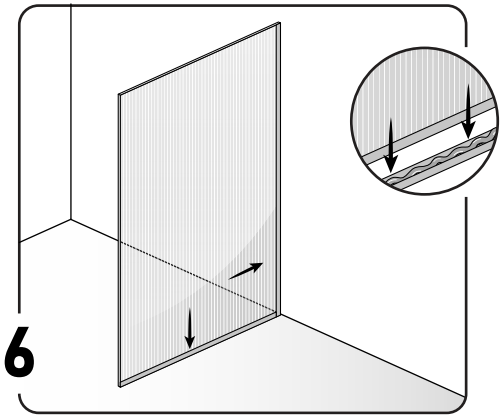

Final Inspection:
Allow proper curing time, then perform a final inspection to confirm stability, alignment, and secure fixing.

TOOLS REQUIRED

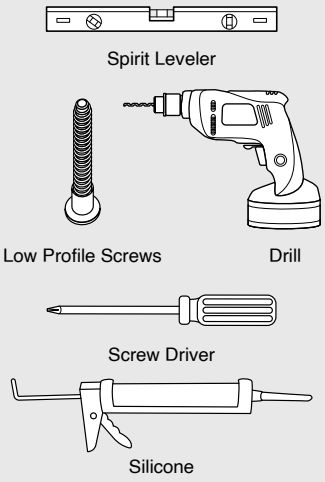

WARNING

- Handle all glass panels with extreme care. Glass edges are sharp and may cause injury if mishandled.
- Always wear safety gloves, closed footwear, and protective eye wear during installation.
- Ensure all supports and rails are installed on solid, stable, and level surfaces. Improper installation may result in failure or injury.
- Never force the glass frame into position. Excessive pressure may crack the glass or damage fittings.
- Keep children and pets away from the installation area at all times.
- Do not lean glass panels against unstable surfaces. They may tip over and shatter.
- Confirm that all screws and fasteners are securely tightened before use.
- Avoid standing directly beneath the glass panel while positioning or adjusting it.

CARE & MAINTENANCE

- Clean glass surfaces regularly using a soft cloth and mild, non-abrasive glass cleaner.
- Avoid harsh chemicals, abrasive pads, or acidic cleaners, as they may damage the glass or frame finish.
- Keep the bottom support area free from dust, sand, and debris to maintain stability and appearance.
- Inspect adhesive joints, screws, and frame alignment periodically to ensure long-term safety.
- Do not apply excessive force or pressure to the glass surface.
- Do not hang heavy objects or accessories on the glass or frame.
- If cracks, chips, looseness, or unusual movement are noticed, stop using the installation immediately and inspect or consult a professional.

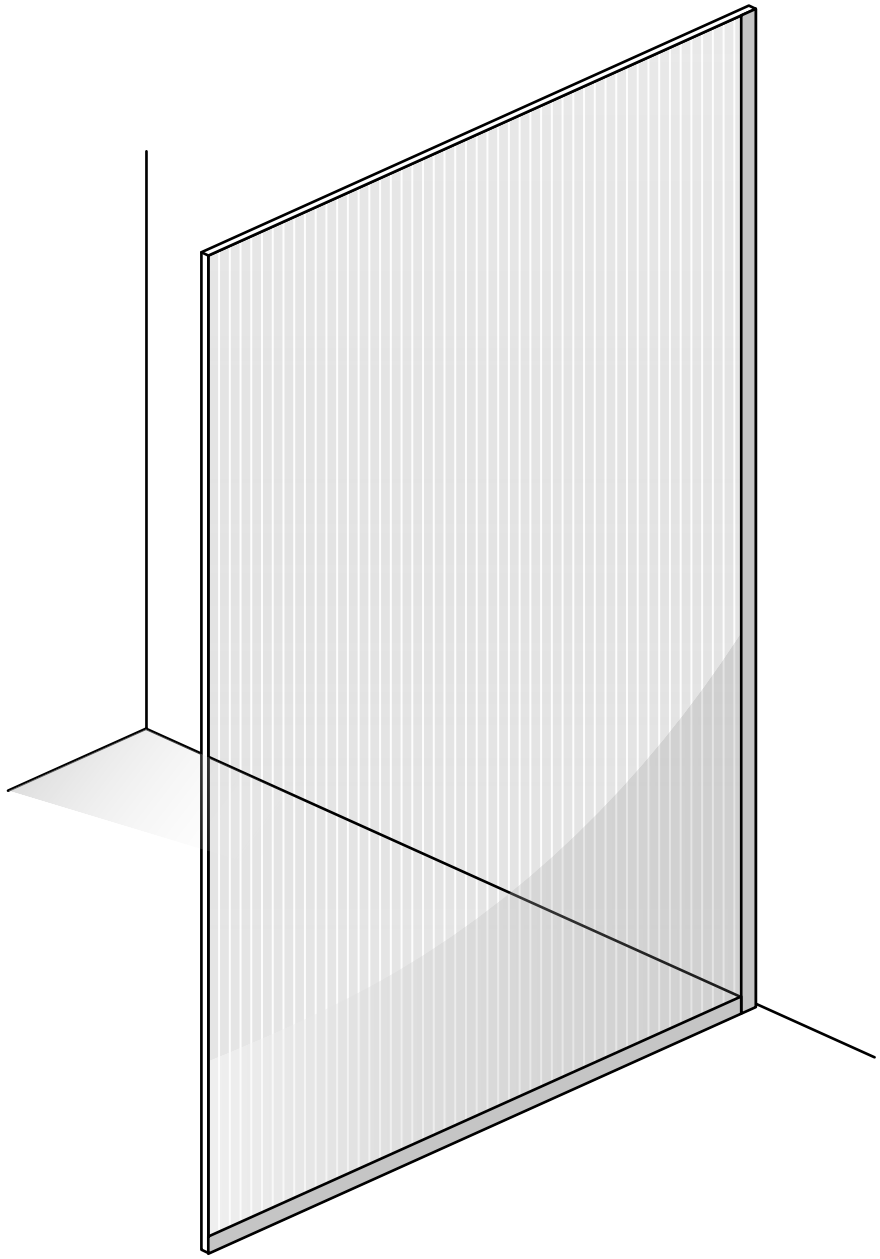

SHOWER WALL, FRAMES ALL AROUND

INSTALLATION MANUAL

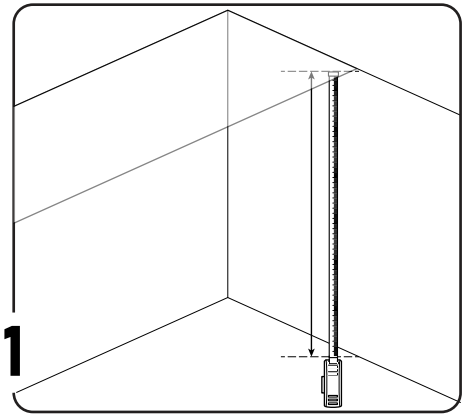

Mark the Wall
Mark a straight vertical reference line on the wall using a spirit level. Measure the height carefully to ensure accurate alignment.

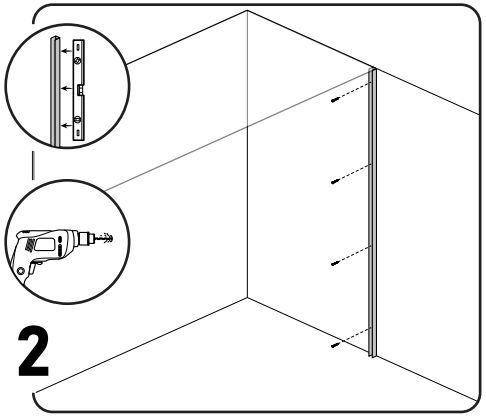

Install the Vertical Profile
Fix the vertical wall profile along the marked line using screws and or a wall suitable adhesive. Seal all drilled holes thoroughly with silicone to prevent water penetration.

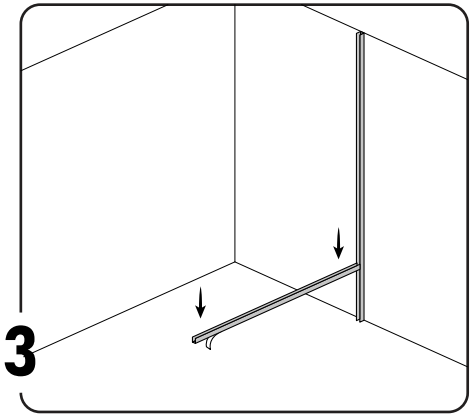

Fix Bottom Support:
Apply a high-quality construction adhesive evenly along the bottom support. Place it accurately on the floor according to the measured alignment. Allow sufficient bonding time.

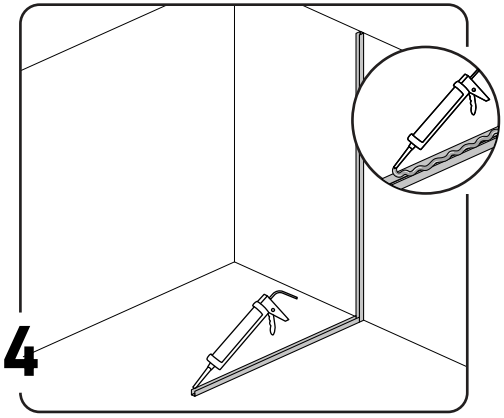

Apply Adhesive:
Apply adhesive to the bottom, top and side supports. Position the wall frame onto the supports and press gently to achieve a snug and stable fit. Recheck alignment and level before the adhesive sets.

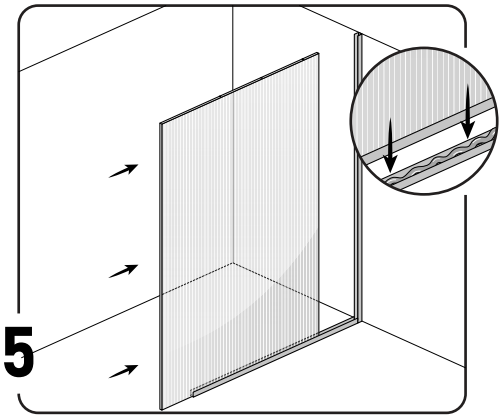

Install the Glass Panel
Slide the glass panel carefully into the installed frame. Ensure the panel sits evenly and securely within all supports.

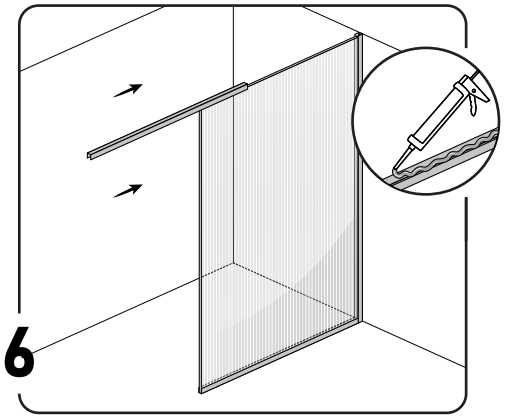

Install the Top Support
Secure the horizontal top strip to the ceiling using Silicon. Confirm it is level and firmly fixed.

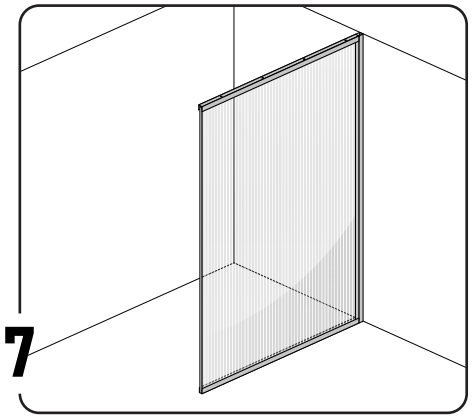

Final Inspection:
Allow sufficient curing time for all adhesives. Perform a final inspection to confirm stability, alignment, and secure fixing of all components.

TOOLS REQUIRED

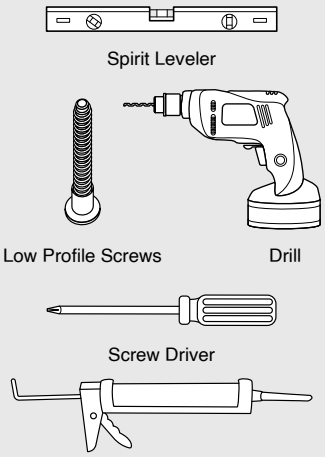

WARNING

- Handle all glass panels with extreme care. Glass edges are sharp and may cause injury.
- Always wear safety gloves, closed footwear, and protective eye wear during installation.
- Ensure all supports and rails are installed on solid, stable, and level surfaces.
- Never force the glass frame into position. Excess pressure may crack the glass or damage fittings.
- Keep children and pets away from the installation area at all times.
- Do not lean glass panels against unstable surfaces.
- Ensure all screws and fasteners are fully tightened before use.
- Avoid standing directly beneath the glass panel while positioning or adjusting it.

CARE & MAINTENANCE

- Clean glass surfaces regularly using a soft cloth and mild, non abrasive glass cleaner.
- Do not use harsh chemicals, abrasive pads, or acidic cleaners.
- Keep the bottom support area free from dust, sand, and debris.
- Periodically inspect adhesive joints, screws, and frame alignment.
- Do not apply excessive force or pressure to the glass.
- Do not hang heavy objects or accessories on the glass or frame.
- If cracks, looseness, or unusual movement are observed, stop use immediately and inspect or consult a professional.

