YALI & CO.
ELEVATE EVERYDAY LIVING

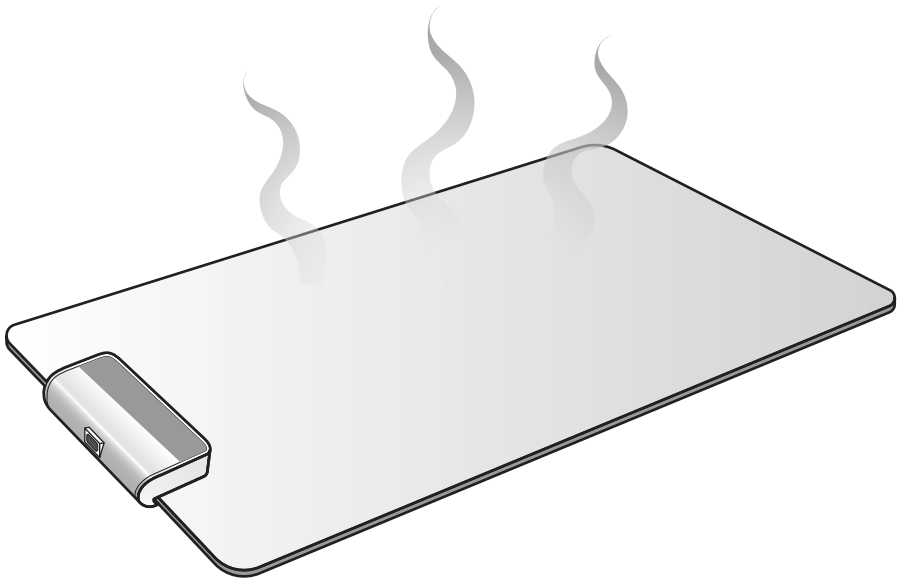

FOOD HEATING MAT

WITH INSULATED BASE MAT

INSTRUCTION MANUAL

Please read this manual carefully before using the product and keep it handy for future reference.

info@yaliandco.com | @yaliandco | facebook.com/yaliandco

SAFETY INDICATOR DEFINITION

- To ensure safe use and prevent injury or property damage, please follow the safety precautions below.
- Ignoring these warnings or using the product incorrectly may result in accidents.
- This product is not intended for use by unsupervised young children or individuals with disabilities. Improper use may lead to injury.

WARNING: Indicates safety precautions that may cause death or serious injury.
KIND REMINDER: Indicates safety precautions that may cause minor injuries or property damage.
ATTENTION: Indicates other matters that may affect the user experience.

KEY SAFETY PRECAUTIONS

- Do not touch the device with wet hands. Avoid plugging in or unplugging it while your hands are wet to prevent electric shock or injury.
- Keep the device away from flammable materials. Do not use it near curtains, drapes, or similar items to avoid fire hazards.
- Never submerge the device in water or allow it to get drenched. Ensure the body and all components remain dry.
- Do not disassemble or repair the device unless you are a qualified technician.
- Keep the device out of reach of children to prevent electric shock, burns, or other accidents.
- The heating surface becomes hot during use and remains hot afterward. Do not touch it to avoid burns.
- Do not place paper, aluminum foil, fabric, or other unrelated materials on the heating surface.
- Do not place the device directly on metal countertops. Always use the insulated mat provided.
- Pay attention to areas marked with high-temperature symbols during use. The center of the device may become very hot.
- Do not rinse the product with water or allow foreign objects to enter the device.
- Do not heat-sealed containers or canned foods directly on the device, as they may explode due to pressure buildup from thermal expansion.
- Use only with a dedicated power outlet rated at 10A or higher. Always unplug the device after use.

GENERAL SAFETY GUIDELINES

- Ensure the device is placed at least 1.5 meters (5 feet) away from water sources or open flames, whether in use or idle.
- If the power cord is damaged, it must be replaced with a dedicated cord from the manufacturer or by an authorized service center.

HANDLING AND MAINTENANCE PRECAUTIONS

- Do not place heavy objects or allow sharp items to scratch the panel.
- This product should not be connected to an external timer or operated using a remote control.
- Do not use alcohol, thinners, toluene, acidic cleaners, or lamp oil as they may cause discoloration.
- Clean oil and grease from the surface to prevent damage.
- Discontinue use if cracks appear on the surface to avoid the risk of electric shock.
- Do not place metal items like knives, forks, or lids on the panel surface as they may become hot.
- Do not cover or touch the panel during operation. Allow it to cool before cleaning.
- Do not clean the device by rinsing or submerging it in water.

PRODUCT OVERVIEW

1. HEATING DISC POSITION
2. OPERATION PANEL
3. POWER LINE
4. SILICONE PAD

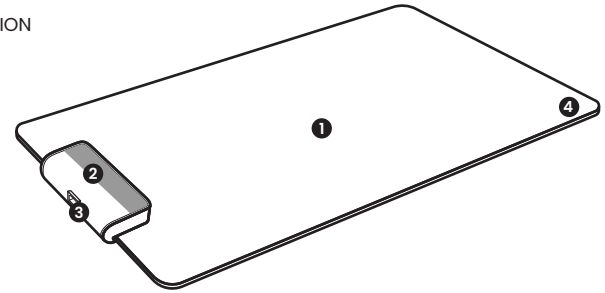

WHATS IN THE BOX

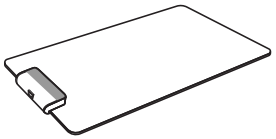
Food Heating Mat

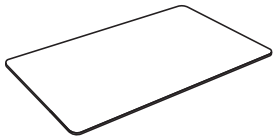
Insulated base mat

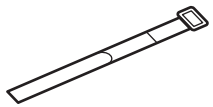
Velcro strap


Bag

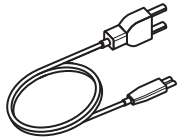
Power cord



Instruction manual

ADDITIONAL NOTES

- For household use only; not suitable for commercial or industrial environments.
- A light odor during initial use is normal and temporary.

CONTROL PANEL OVERVIEW

215°F/100°C 175°F/80°C 140°F/60°C	FIXED TEMPERATURE RANGE
1H 2H V	TIME RANGE
TEMPERATURE TIME	PRESS TO CYCLE THROUGH THE PRESET TEMPERATURE SETTINGS.
CHILD LOCK	PREVENTS ACCIDENTAL USE BY CHILDREN

USER GUIDE

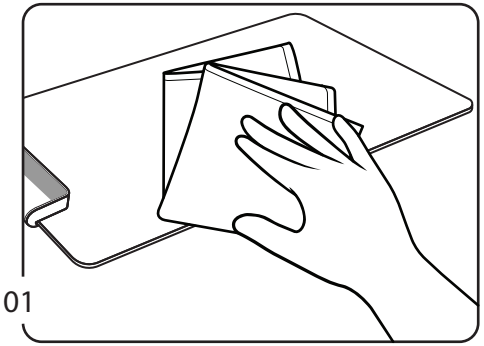
01

Step 1: Before use, clean the heating mat thoroughly. Ensure the surface is free of water, food residue (like rice), or any other debris.
Tip: Always place the heating mat on the included insulated base to protect your counter top or table.

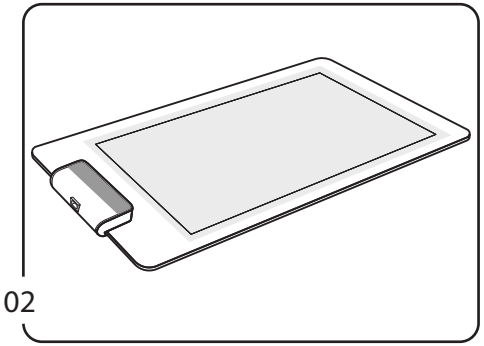
02

Step 2: Place your food container or dish directly on the center of the heating mat.

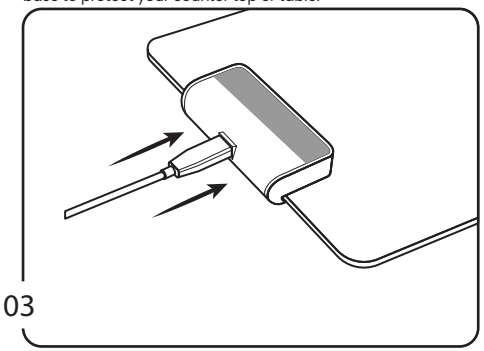
03

Step 3: Plug the power cord securely into a working electrical outlet.

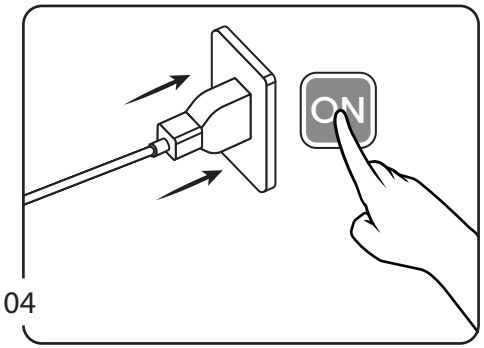

04

Step 4: Press the Power button to turn the heating mat on. By default, it will start at 140°F/60°C.

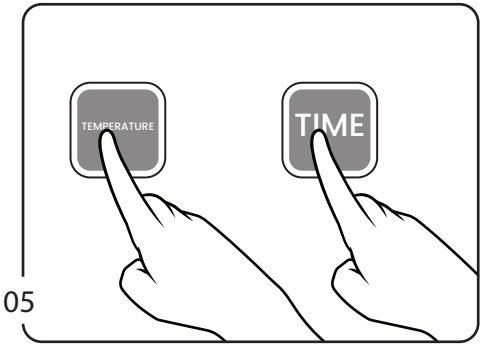

05

Step 5: Use the Temperature and Time buttons to adjust the settings.

- Temperature options: 140°F/60°C, 175°F/80°C, 215°F/100°C
- Time options: 1 hour, 2 hours, 4 hours

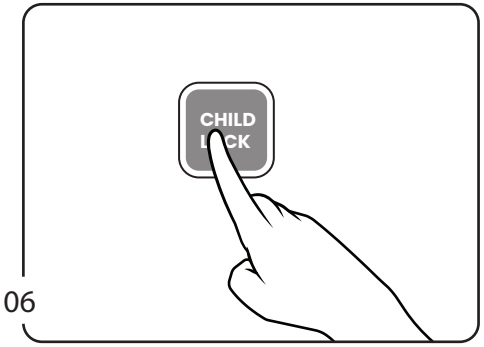

06

Step 6: To activate the Child Lock, press and hold the button for 2 seconds. This prevents accidental button presses. Press and hold it again for 2 seconds to unlock.

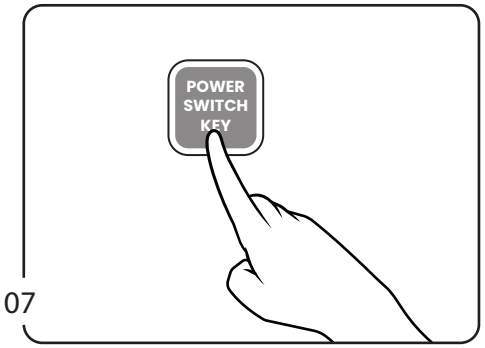

07

Step 7: When you're finished, press the Power button to turn the mat off. If left untouched, it will shut off automatically after 6 hours.

CLEANING

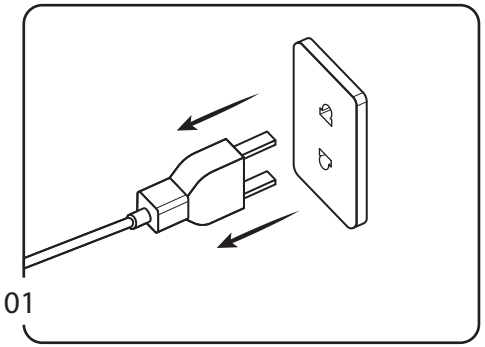

01

Step 1: Always unplug the mat and let it cool completely before cleaning.

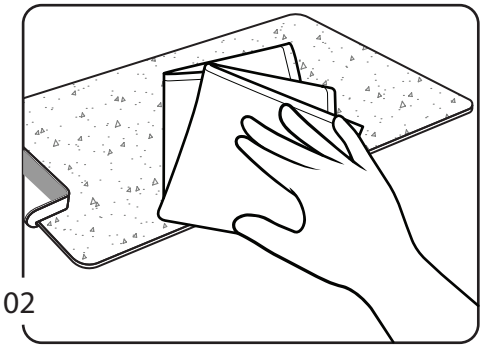

02

Step 2: For light dust or surface dirt, wipe the mat gently with a soft, damp cloth. Let it dry fully before storing or using again.

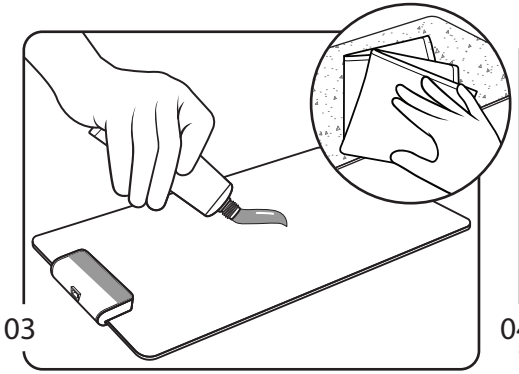

03

Step 3: If the surface has oil or food residue, use a soft, damp cloth with a small amount of mild detergent or non-abrasive cleaner like toothpaste. Wipe clean and dry thoroughly.

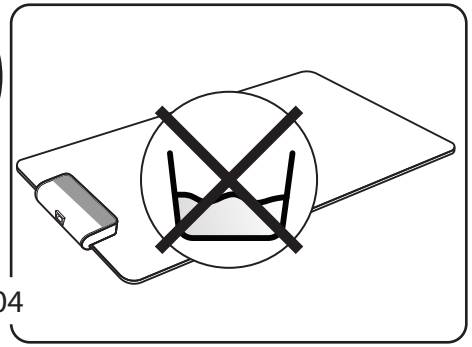

04

Step 4: Do not rinse the mat directly with water or submerge it in water.

STORAGE GUIDE

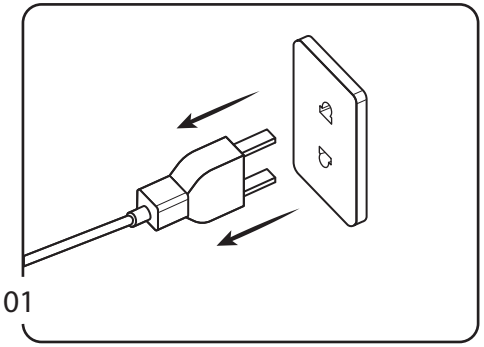

01

Step 1: After use, let the heating mat cool down for at least 15 minutes before handling.

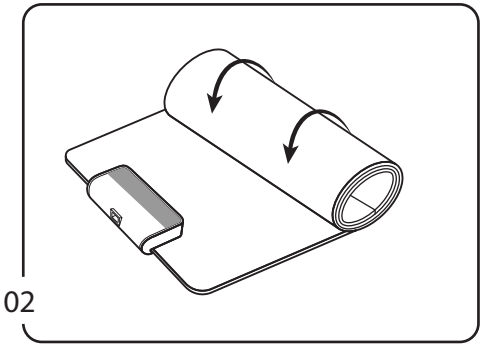

02

Step 2: Starting from the side with the control panel, gently roll the mat toward the opposite end.

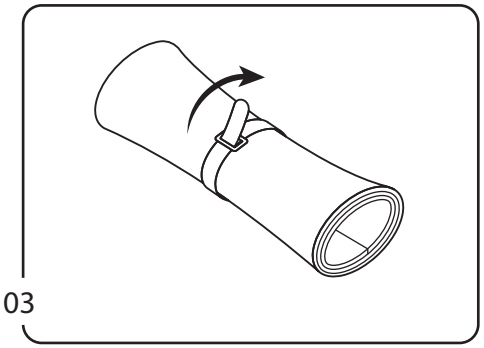

03

Step 3: Use the provided Velcro straps to secure the rolled-up mat and power cord together for easy storage.

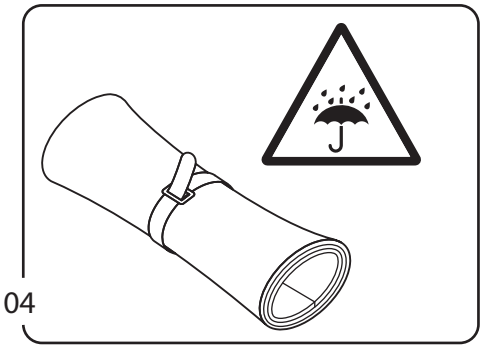

04

Step 4: Keep the mat in a dry, safe place. If you won't be using it for a while, unplug it and store it in a cool, dry area to help extend its lifespan.

MAINTENANCE

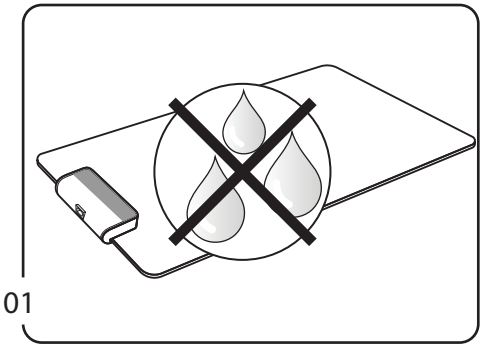

01

Step 1: Always keep the heating mat dry. Avoid exposing it to water, moisture, or spills.

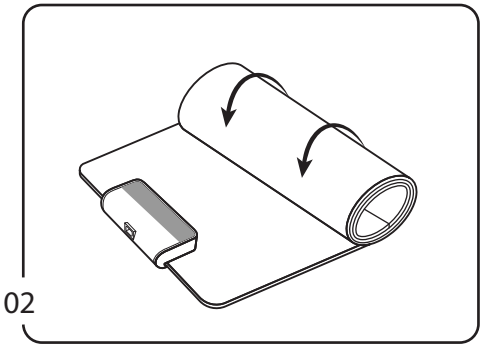

02

Step 2: If you're not planning to use the mat for a while, unplug it and turn off the power. This helps extend its overall lifespan.