Feliluke®

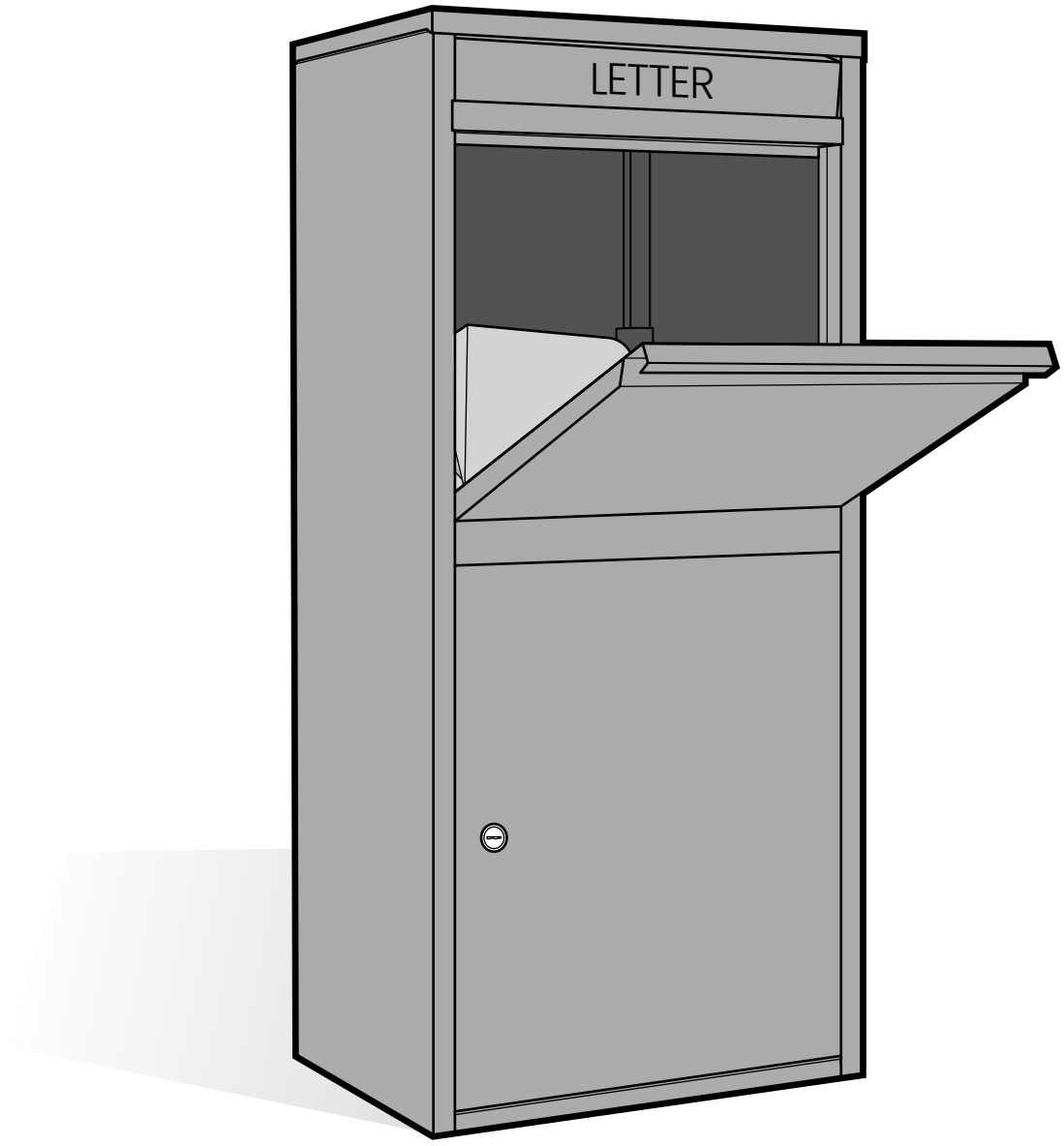

Package Delivery Box

INSTRUCTION MANUAL

THANK YOU FOR YOUR PURCHASE!

For quick installation, please read this installation instruction or scan the QR code to watch the video. If you have any question, please feel free to email us at support@feliluke.com.

PARTS LIST

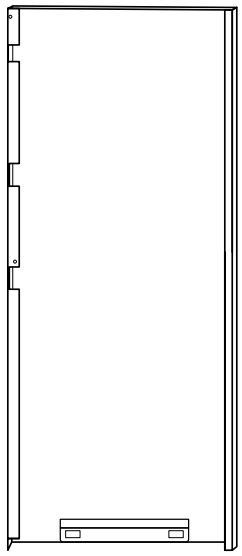

LEFT PANEL

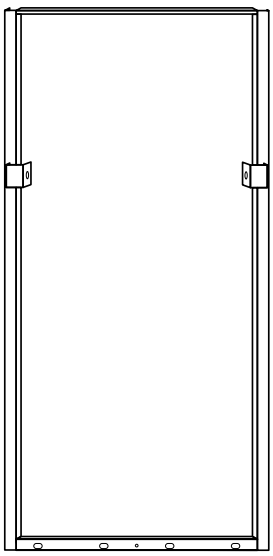

BACK PANEL

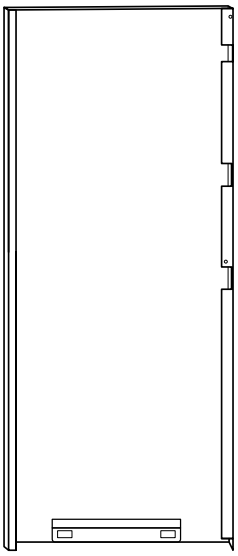

RIGHT PANEL

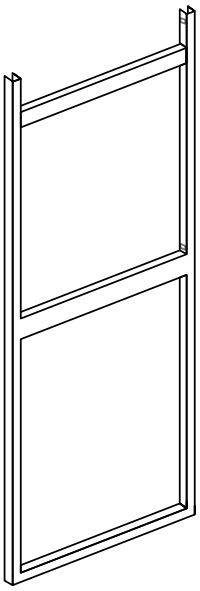

FRONT FRAME

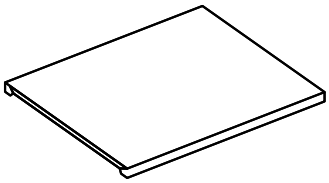

TOP LID

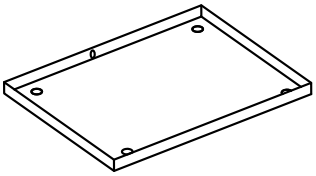

BOTTOM PANEL

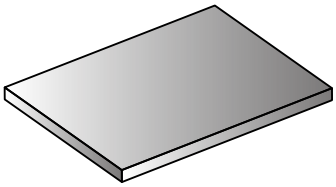

SPONGE MAT

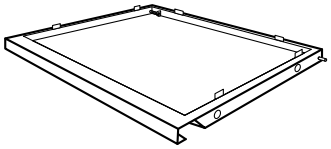

PACKAGE DOOR

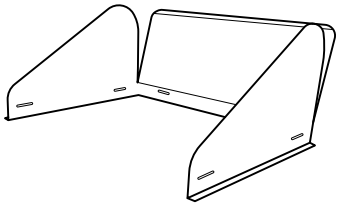

FLAP HATCH

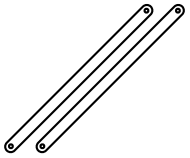

METAL STRUT

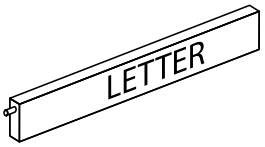

LETTER FLAP

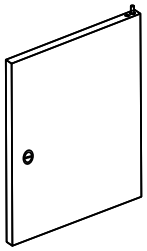

BOTTOM DOOR

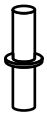

HINGE PIN

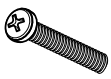

M5X20



M5X10

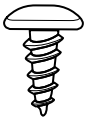

SCREW



LOCK NUT



ANCHOR

GATHER REQUIRED TOOLS & PARTS

- Ensure you have a Phillips-head screwdriver for installation.
- Count all components (panels, screws, hinges, struts, etc.) against the provided parts list to confirm nothing is missing.

CHOOSE A SUITABLE WORKSPACE

- Select a clean, flat, and well-lit surface for assembly.
- Keep the instruction manual nearby for reference during the process.

PRE-ASSEMBLY CHECK

- Test-fit major panels (back, front, sides) before securing screws to verify alignment.
- Identify all pre-drilled holes and matching hardware for easier assembly.

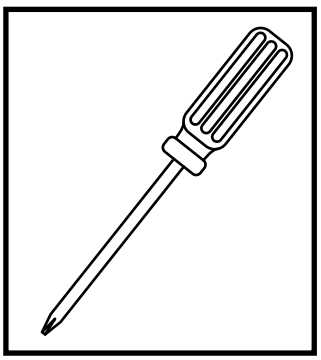

INSTRUCTION MANUAL

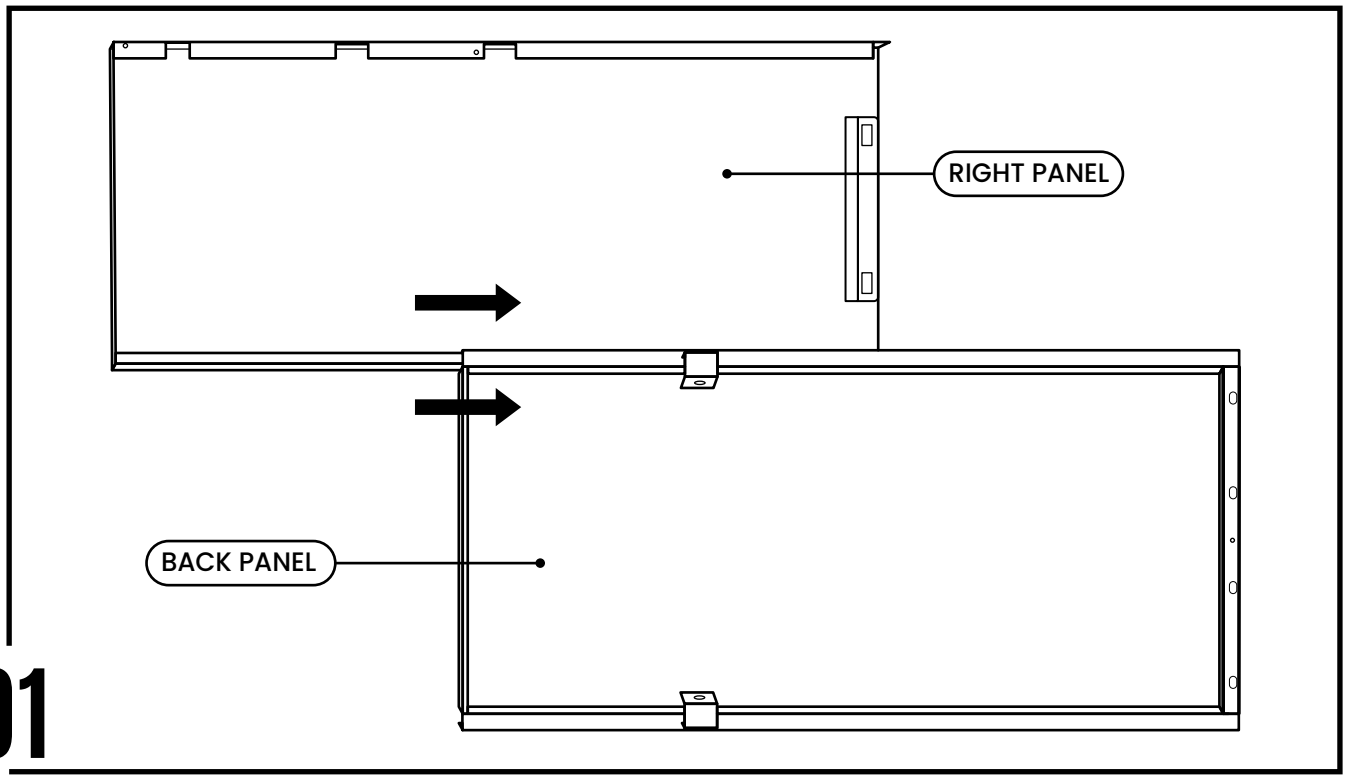

STEP 01: LAY DOWN THE BACK PANEL AND SLIDE THE RIGHT PANEL INTO
Place the back panel flat on the floor with the inner side facing up. Ensure the surface is clean and free from debris.

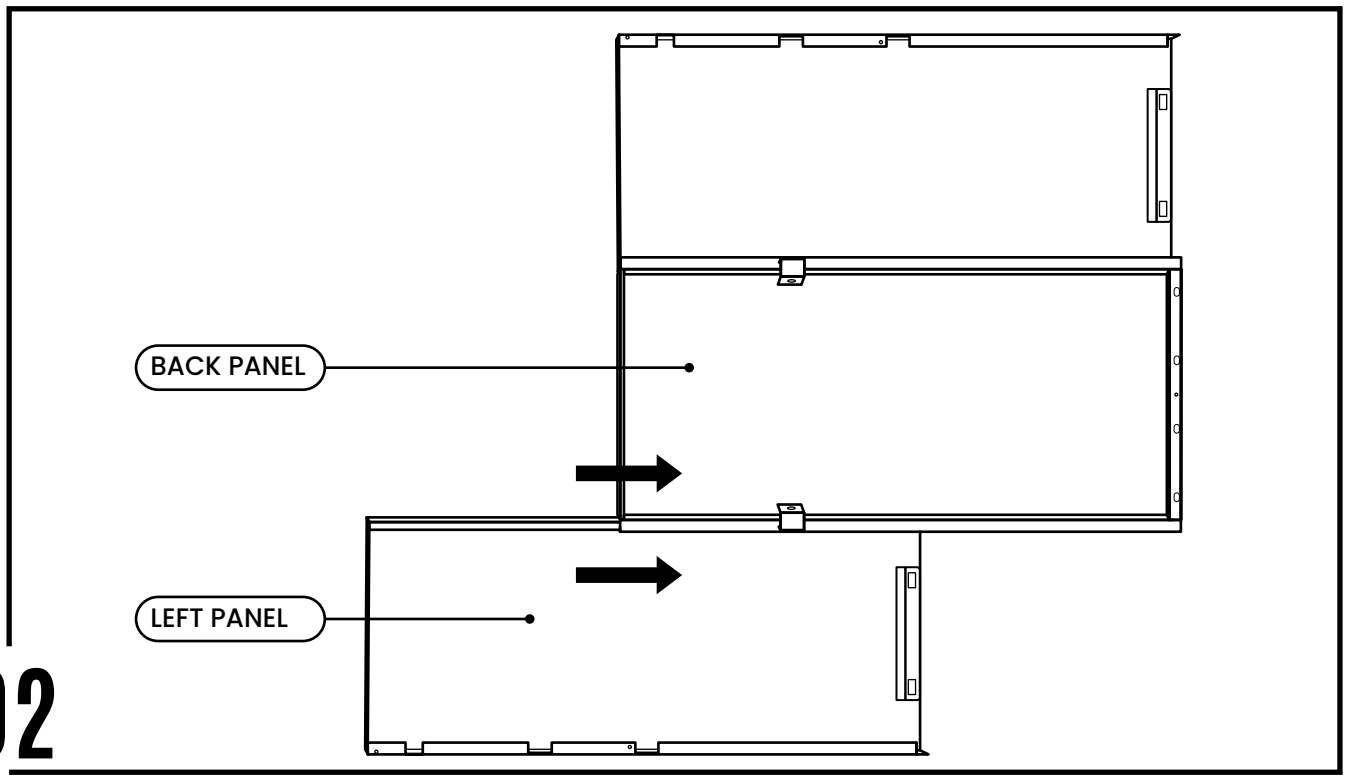

STEP 02: SLIDE THE LEFT PANEL INTO THE BACK PANEL
Align the grooves of the left panel with those on the back panel. Gently slide the panel into place until it is fully inserted.

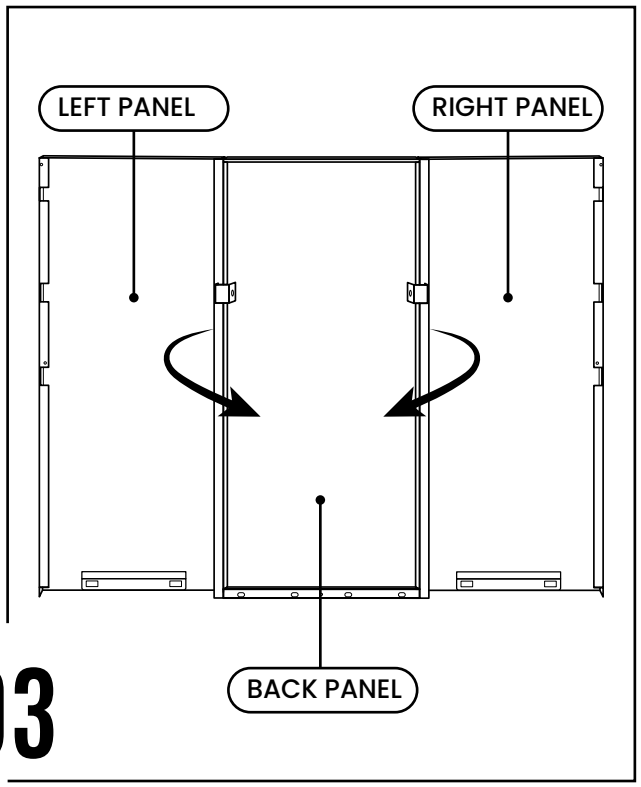

03

STEP 03: STAND THE PANELS UPRIGHT AND FORM A 90-DEGREE ANGLE
Once the back and left panels are connected, carefully lift them and stand them upright. Ensure they form a 90-degree angle.

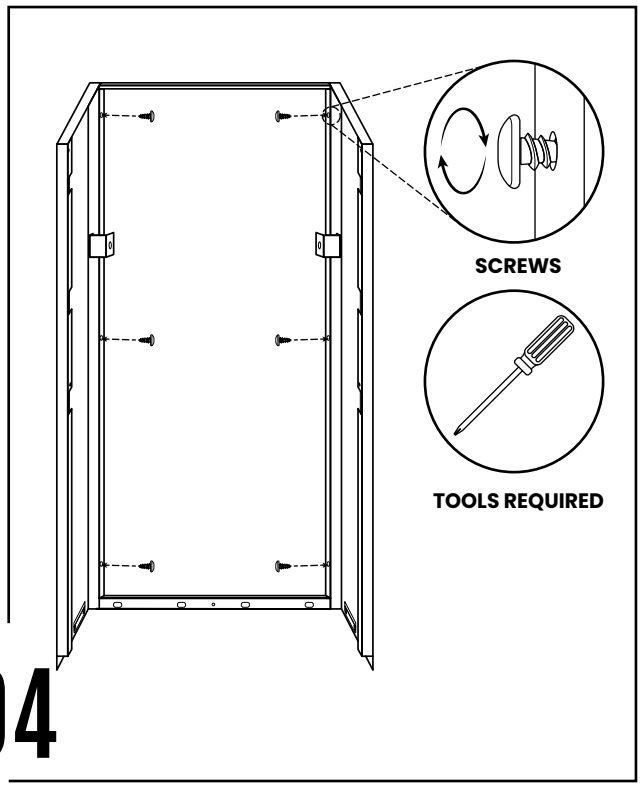

04

STEP 04: ATTACH THE SCREWS
Attached the six screws - three at left side and three at right side - by Phillips-head screwdriver.

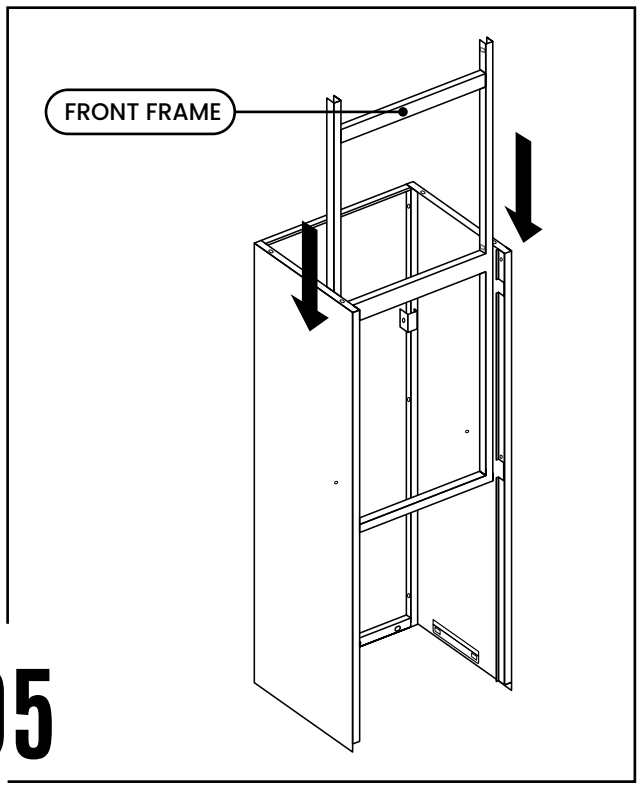

05

STEP 05: INSERT THE FRONT FRAME
Position the front frame between the left and right panels. Slide it down into the grooves and lock it firmly in place.

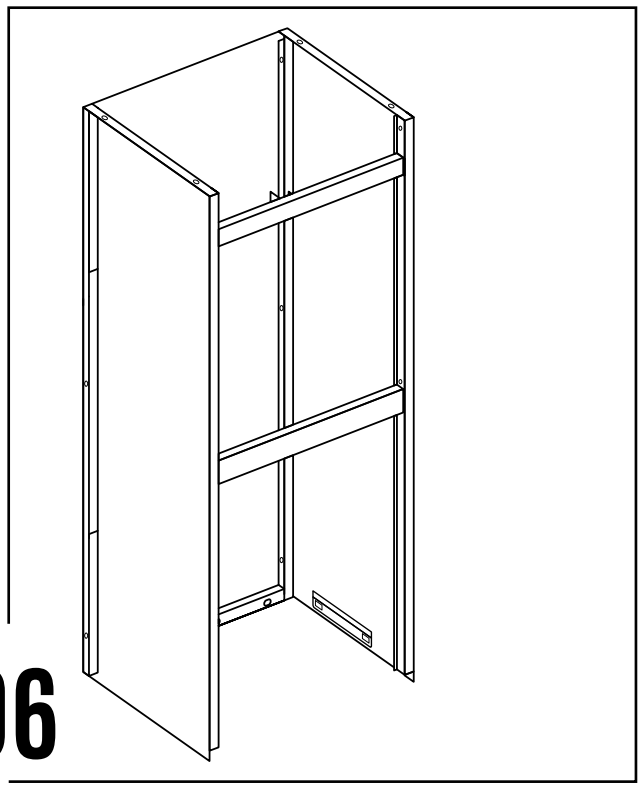

06

STEP 06: SECURE THE FRONT FRAME
Check to ensure the connection is tight and stable.

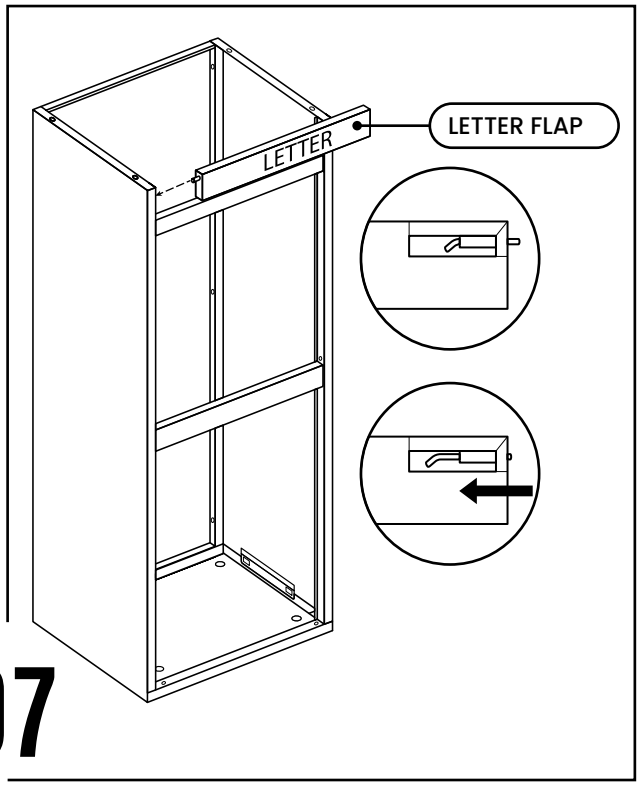

07

STEP 07: INSTALL THE LETTER FLAP
Press the top pin of the letter flap and align it with the slot on the front frame. Push it in until it locks into position.

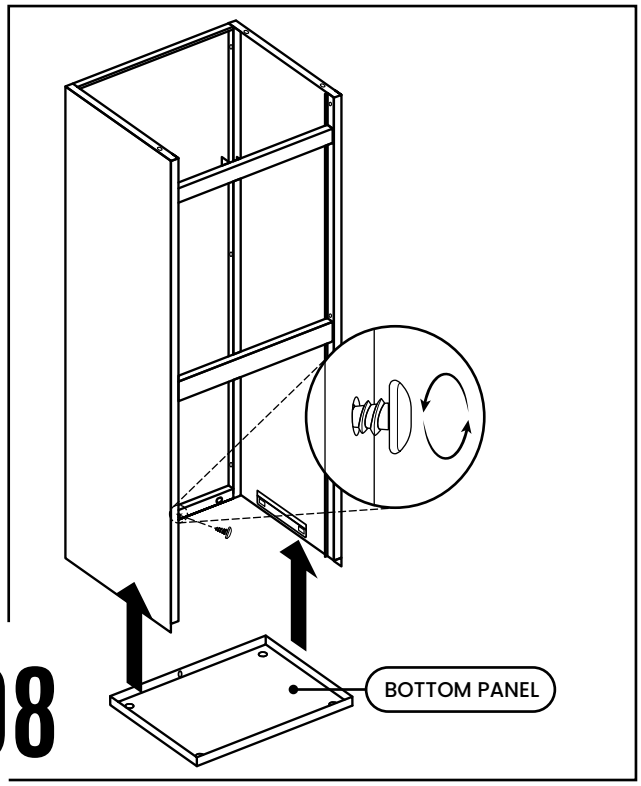

08

STEP 08: INSERT THE BOTTOM PANEL
Place the bottom panel inside the frame. Snap it into place with the side panels and fasten it at the back using screws for reinforcement.

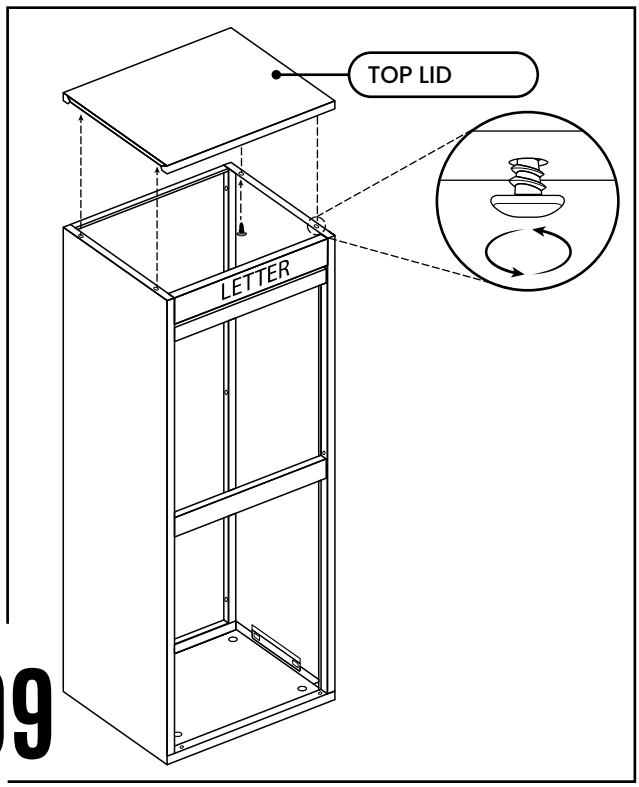

09

STEP 09: ATTACH THE TOP LID
Place the top lid over the main frame, align it correctly and press down firmly. Insert four screws to securely fasten the lid in place.

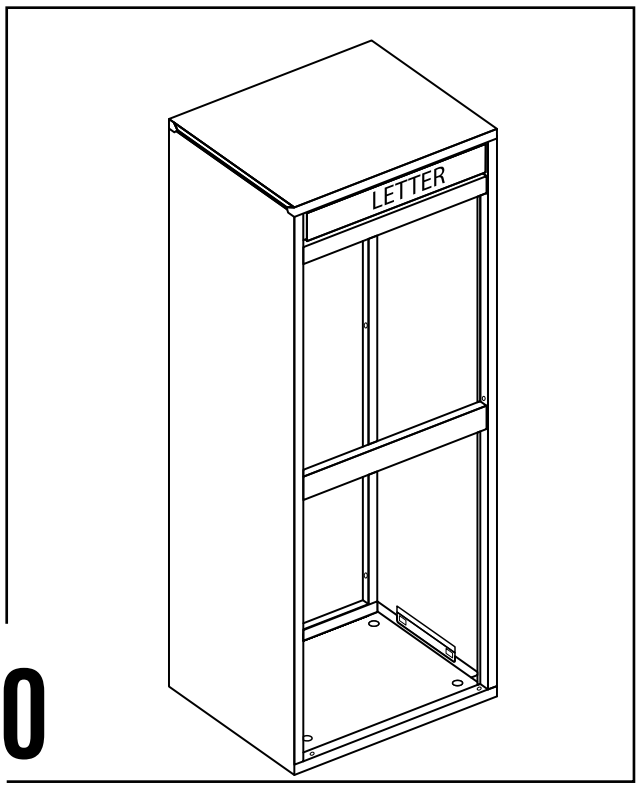

10

STEP 10: VERIFY MAIN FRAME ASSEMBLY
Check the structure to ensure all panels and the top lid are locked properly. The main frame should now be fully assembled.

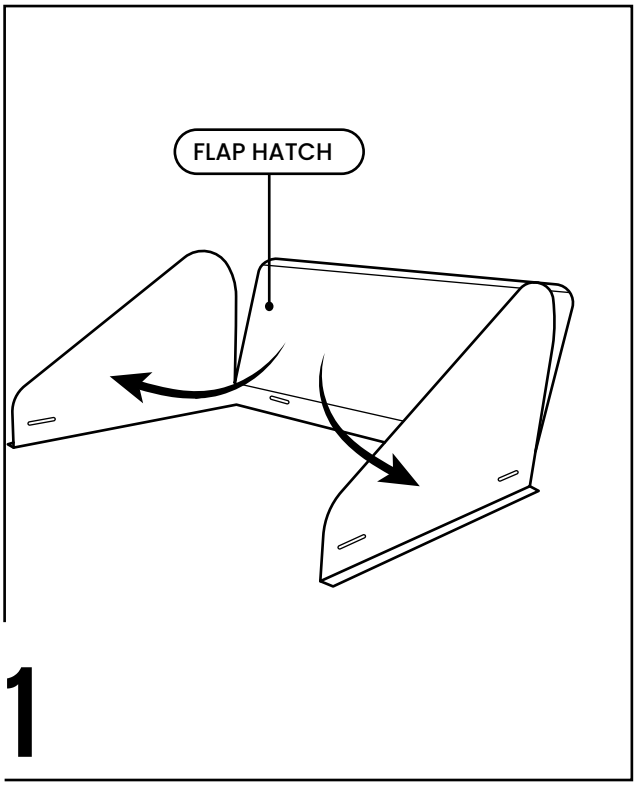

11

STEP 11: EXPAND THE FLAP HATCH PANELS
Open and unfold the flap hatch panels on each side. These will be connected to the package door in the next steps.

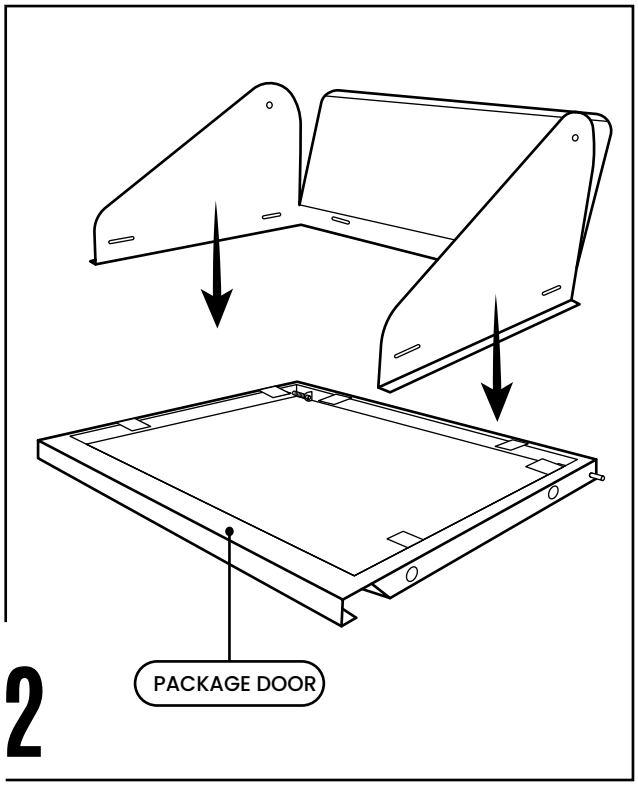

12

STEP 12: CONNECT FLAP HATCH TO PACKAGE DOOR
Insert the hinge pins to attach the flap hatch panels to the package door. Make sure both sides are aligned evenly.

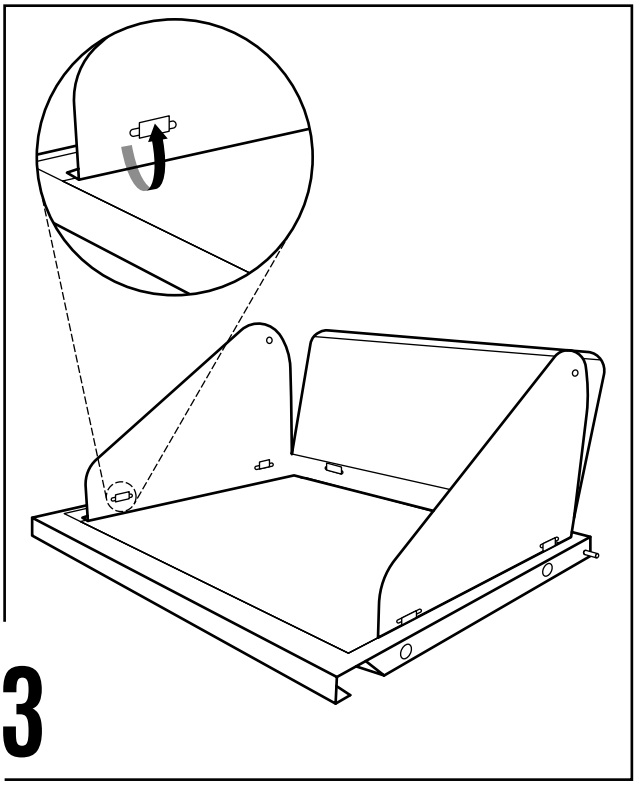

13

STEP 13: LOCK THE FLAP HATCH IN PLACE
Rotate the hinge pins to securely lock the flap hatch to the package door. Confirm the movement is smooth and stable.

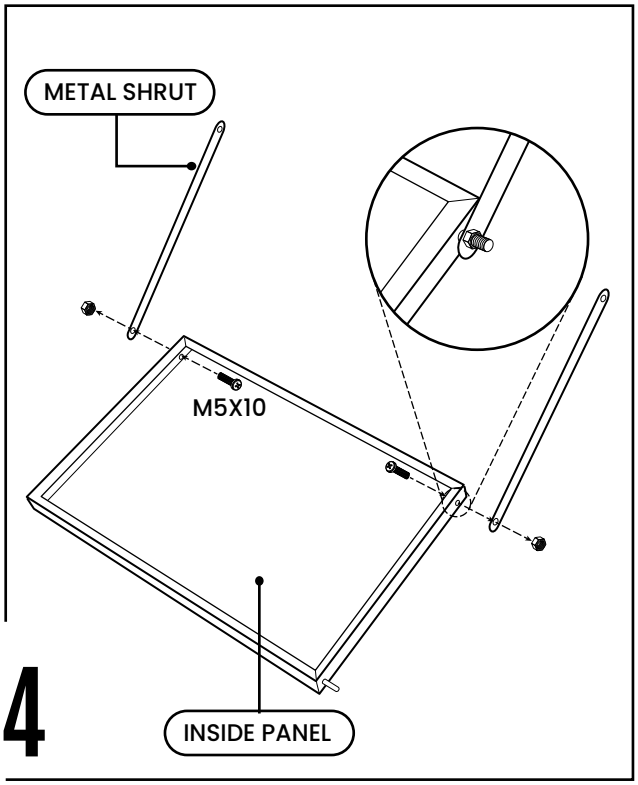

14

STEP 14: ATTACH METAL STRUT TO INSIDE PANEL
Use M5x10 screws to connect the metal strut to the inner side panel. This provides additional support for the flap hatch assembly.

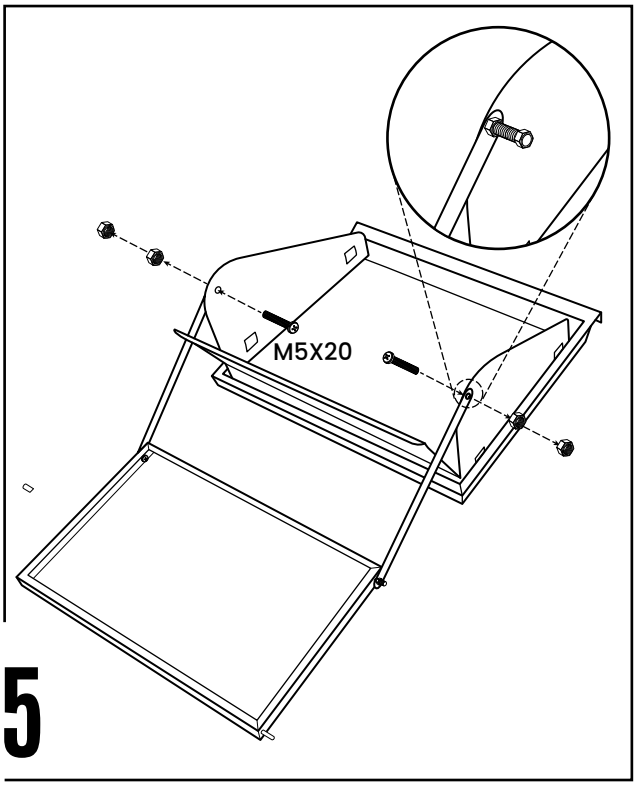

15

STEP 15: CONNECT HATCH AND INSIDE PANEL WITH STRUT

Align the flap hatch with the inside panel and use the metal strut to lock them together. Tighten all screws properly.

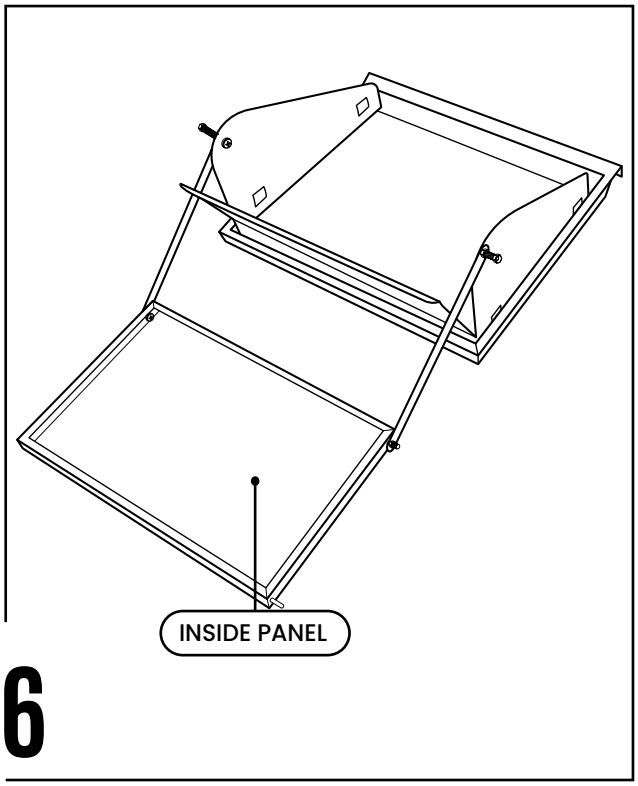

16

STEP 16: CONFIRM PACKAGE DOOR ASSEMBLY

Ensure the package door is fully assembled with the flap hatch and support strut. Check for rigidity and correct alignment.

WARNING – FLAP HATCH HANDLING

- Do NOT over-expand the flap hatch beyond its natural opening angle. Forcing it may cause the hinge or connected components to crack or break.
- Avoid repeatedly locking and unlocking the pins, as the components can wear down or snap over time.
- Always align the parts gently and press the pins firmly only once per assembly to ensure durability.
- Mishandling may void any warranty or replacement support provided with your product

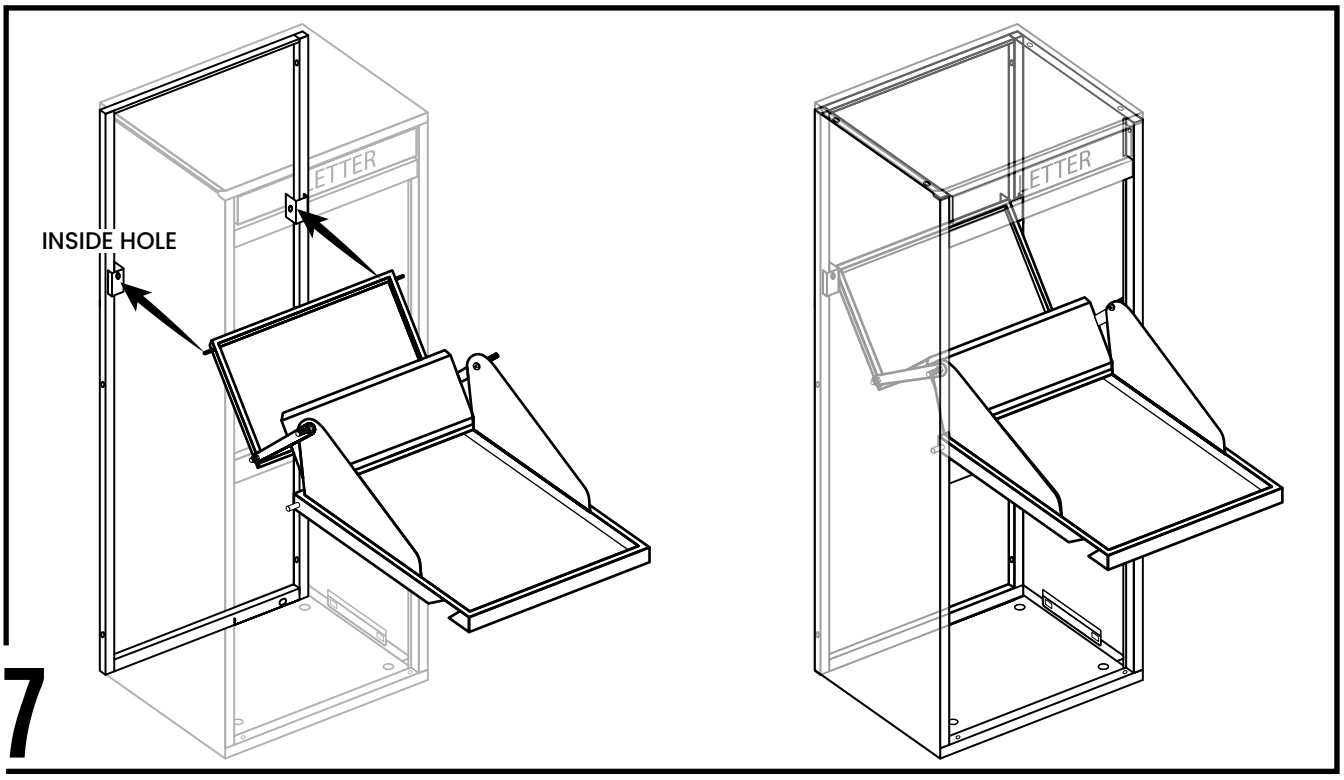

17

STEP 17: ATTACH PACKAGE DOOR TO THE MAIN FRAME
Insert the doors from the inside of the main structure. Insert the hinge pins into the designated holes and hinge pins of the package door onto the front frame.

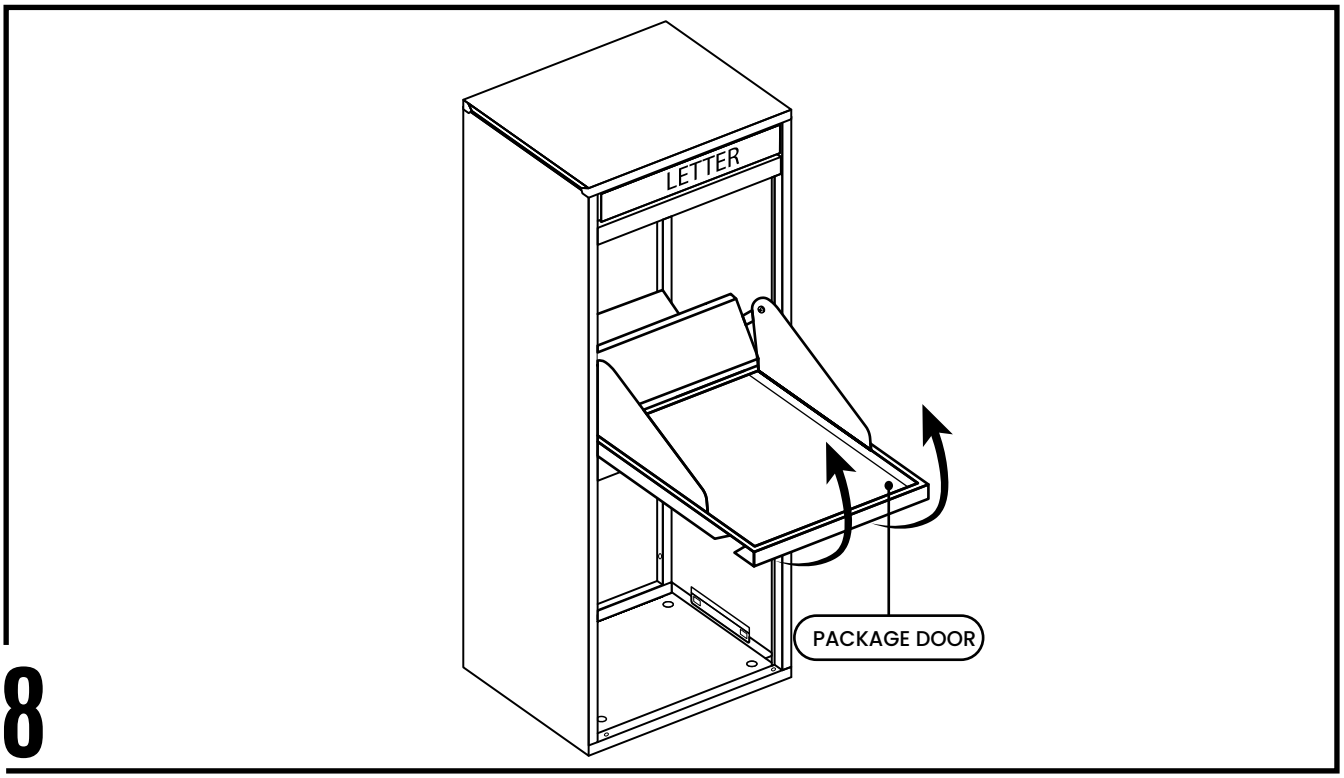

18

STEP 18: TEST DOOR FUNCTIONALITY
Close the doors and test all movements. Make sure the doors open and close smoothly without any misalignment.

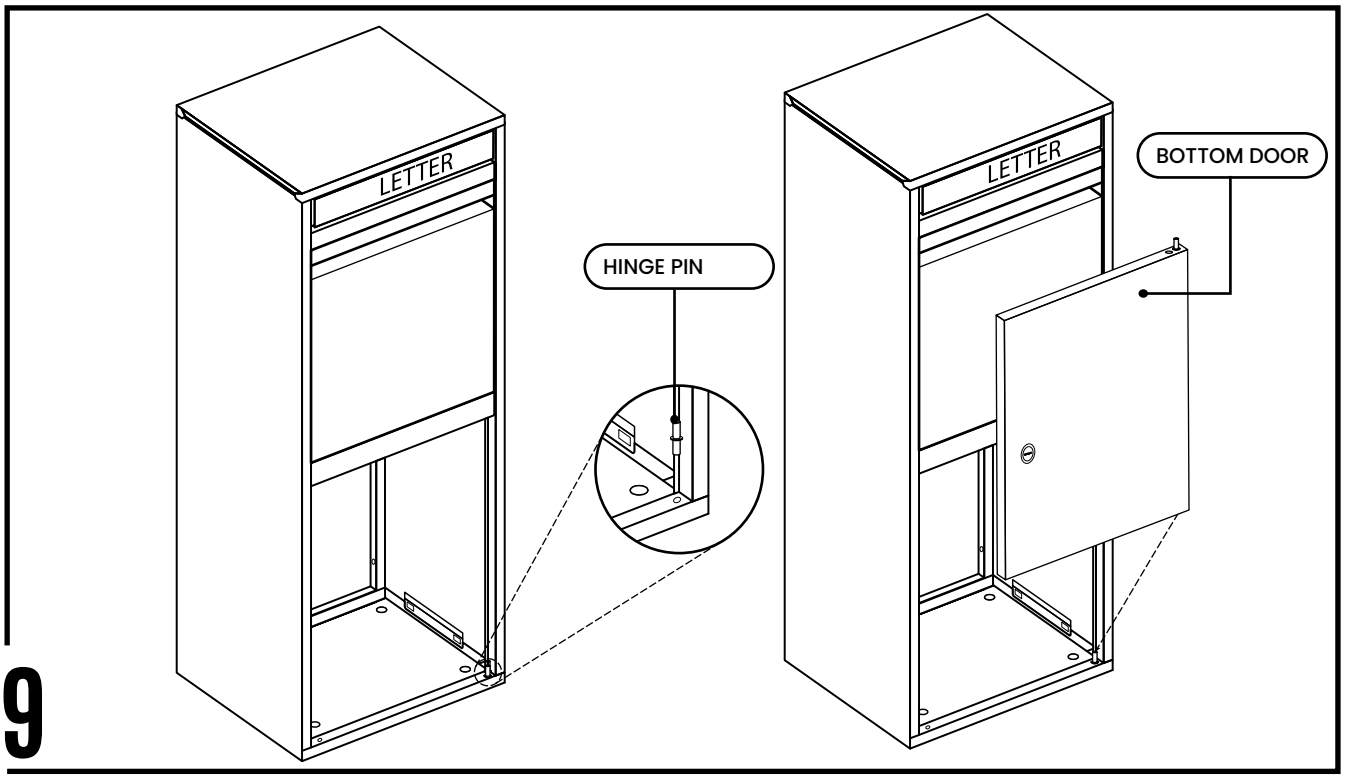

19

STEP 19: INSTALL DOOR HINGES
Insert the hinge pin at the bottom of the door, align the door, and press the top pin to snap it into the top hinge slot of the front frame.

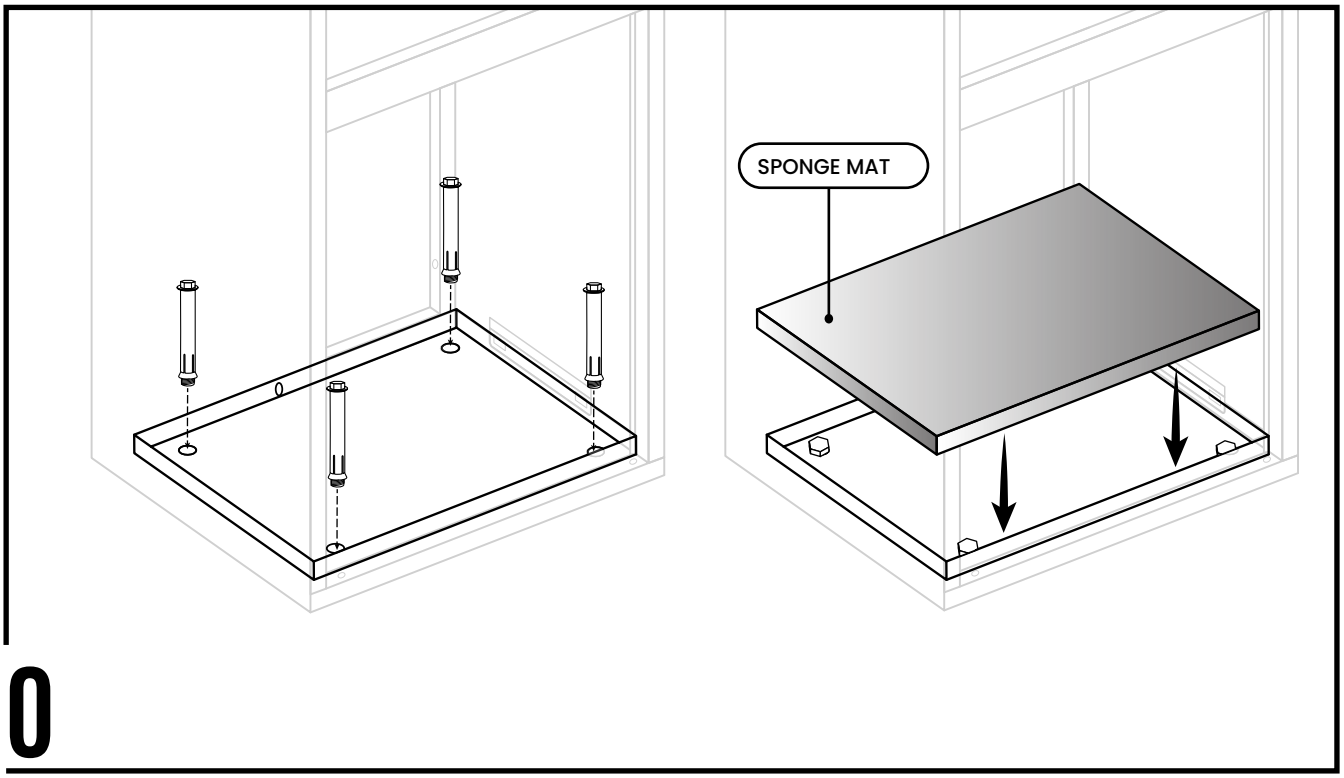

20

STEP 20: ANCHOR THE STRUCTURE TO THE FLOOR
Drill four holes at the base, insert the anchors, and fasten the structure firmly to the floor. Then, place the sponge mat inside for a finished look.

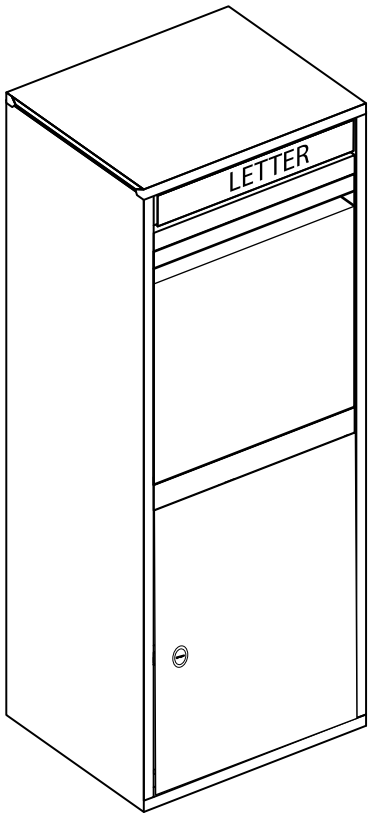

21

STEP 21: FINAL CHECK – YOUR PACKAGE BOX IS READY
Perform a final inspection to ensure everything is tight and aligned. Your package box is now fully assembled and ready for use.

WARNINGS & SAFETY GUIDELINES

Follow these warnings to ensure safe use and longevity of your package box:

- This product is not a toy. Keep children away from the package box during assembly and avoid letting them play with moving parts or door flaps.
- While water-resistant, prolonged exposure to rain, snow, or direct sunlight may degrade the materials over time. If possible, place the package box in a semi-covered area.
- Always anchor the package box to a solid surface (e.g., concrete, tile) using the included floor anchors.
- Use the included sponge mat to protect the bottom panel and reduce moisture retention.

NOTE: Feliluke package delivery box is NOT intended to replace a safe box. Its primary purpose is to receive parcel deliveries.

Feliluke®

support@feliluke.com | www.feliluke.com