CONTAINER WINDOW SYSTEM

Installation Guide

15–30 MIN
TYPICAL INSTALL TIME

BUILDER TIP: The window itself is your layout jig. Build the trim frame tight around it, remove the window, then install the frame into the container opening.

INSTALLATION OVERVIEW

1 PHASE

Prepare Opening

Cut the container wall, clean & prime the steel.

2 PHASE

Build Frame Around Window

Use the window as a jig to assemble the trim frame.

3 PHASE

Install Window and Seal

Flash, fasten, and seal the window for weather tight results.

PRO TIPS:

- The window is your jig — build the frame tight around it.
- Always trim equal amounts from both sides of the header or sill.
- Ensure the frame is tight to the steel wall before bolting.
- The header flashing is non-negotiable — it's what sheds water.

NOTE

This window is designed for stationary container structures only. It is not rated for mobile or transport use and must not be subjected to impact loads or structural loading from stacked containers.

Keep this guide for future reference. Inspect and maintain all seals and flashings annually to ensure continued weather tight performance.

Waterproofing & Long-Term Weather Resistance

- The system relies on three overlapping lines of defense: the butyl tape bed, the Z-flashing, and the exterior sealant bead. All three must be correctly installed and maintained for the window to remain weather tight.

ASSEMBLY MANUAL

01

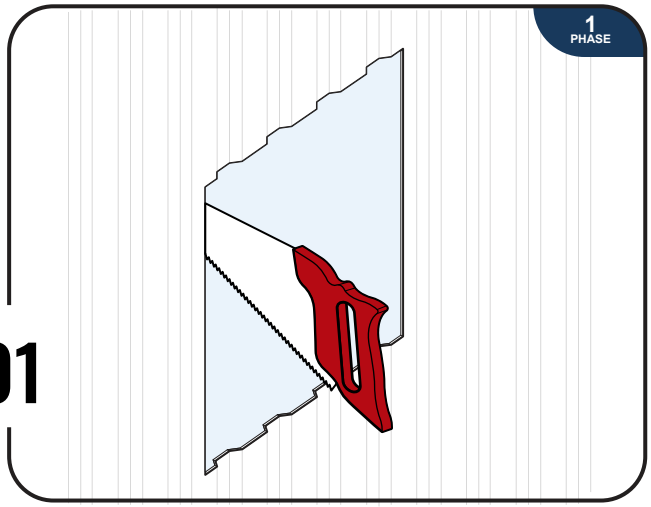

Use a metal-cutting angle grinder or jigsaw with a metal blade to cut along the marked lines. Work from one corner across, keeping the blade tight to the line.

02

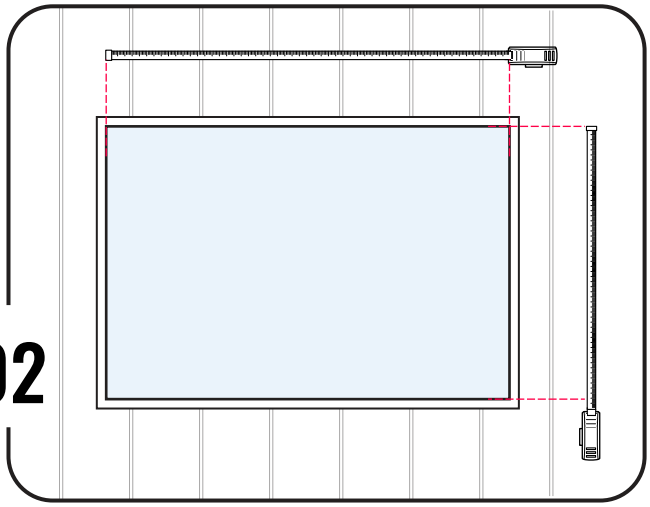

Using a tape measure and chalk line, Measure diagonals corner-to-corner both measurements must match within 1/8". If the opening is out of square, trim or shim as needed before frame assembly.

03

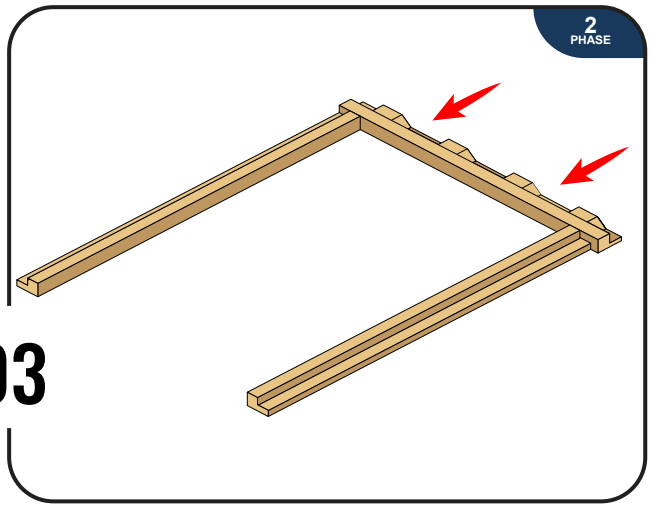

On a flat surface, lay out all three trim pieces in the correct orientation — header (top) and two side jambs. Keep the window unit nearby to use as a reference jig.

04

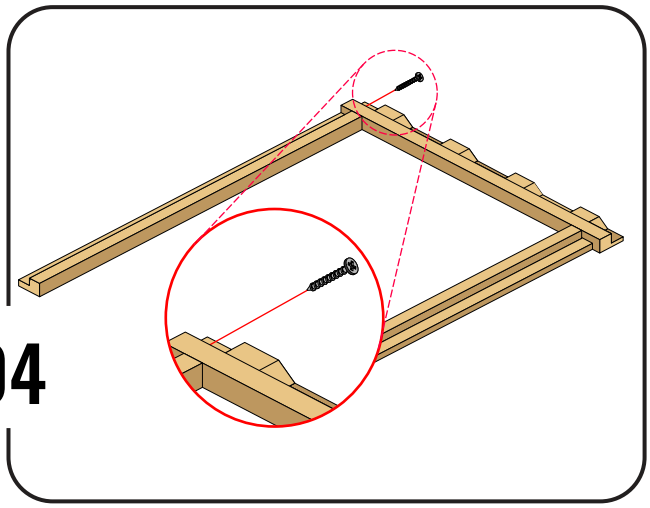

Drive a 3" wood screw through one corner joint to lock the frame together.

05

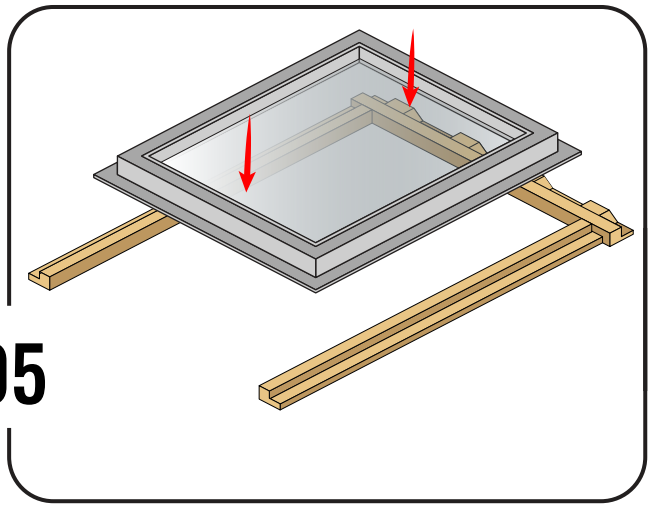

Place the window unit face-down at the center of the layout. Measure and mark any excess length,

06

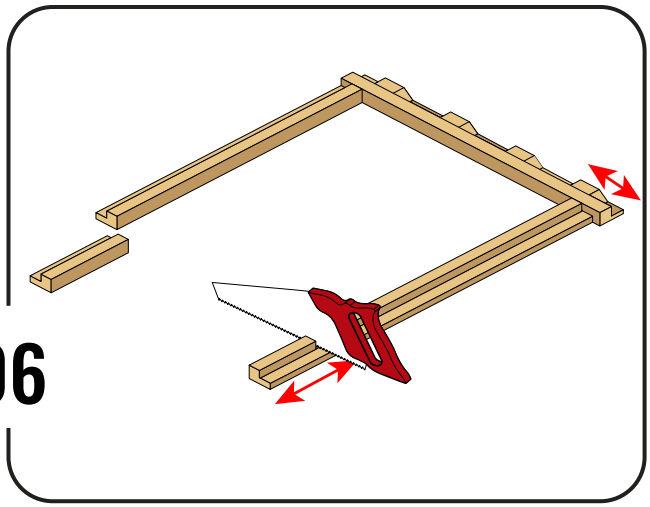

v the window and cut the free side to length. Always trim equal amounts from both ends to maintain symmetry.

07

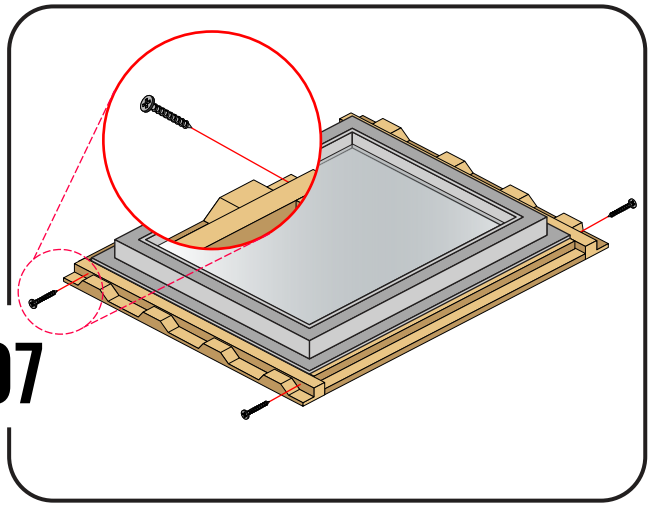

With all four pieces tight to the window, drive 3" wood screws through each corner joint to lock the frame together.

08

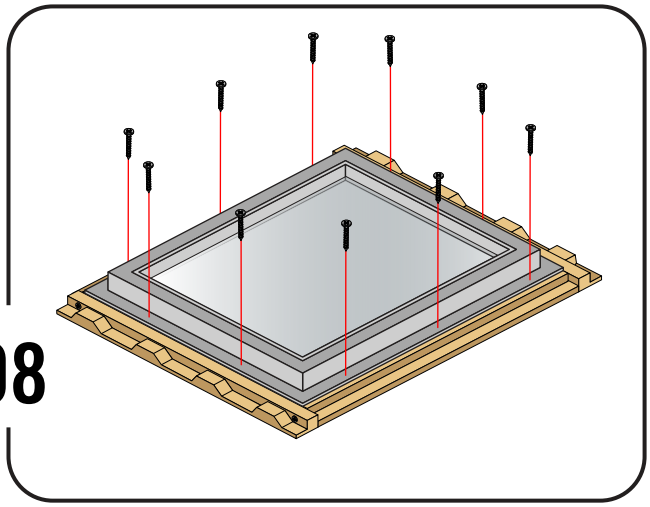

Using the wood screws, fasten the window through its mounting flanges into the trim frame. Begin at the corners and work toward the center on each side to pull the window evenly.

09

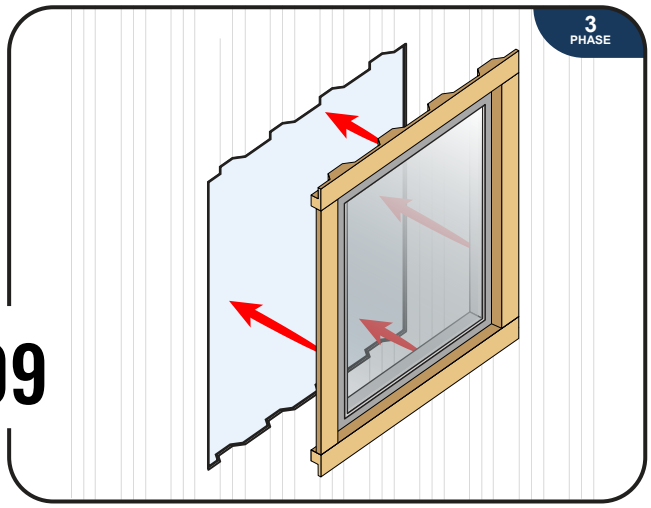

From the exterior, lift the window unit and slide it into the frame opening. Center it within the frame — gaps should be equal on both sides. The window flange should sit flat on the trim face.

10

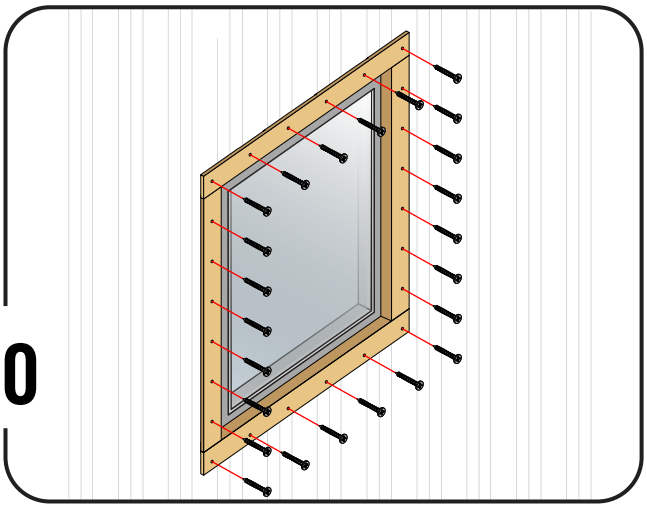

Drive wood screws through the window flange into the trim frame. Do not over tighten over glass areas.

11

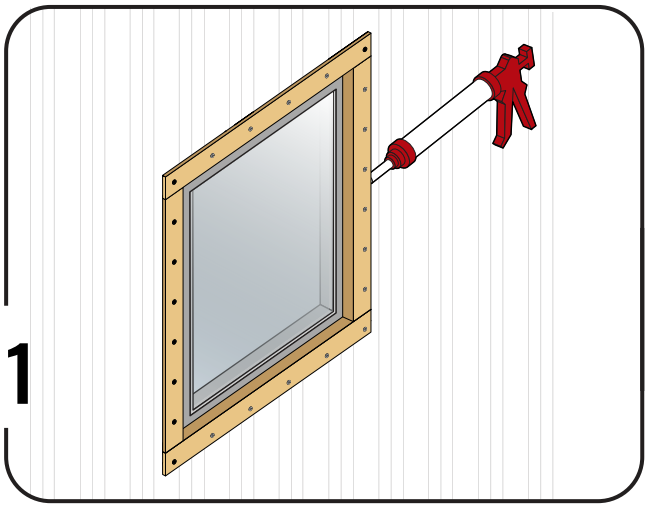

Load the caulk gun with neutral-cure silicone sealant. Run a continuous bead around the full perimeter of the window flange where it meets the trim frame.

12

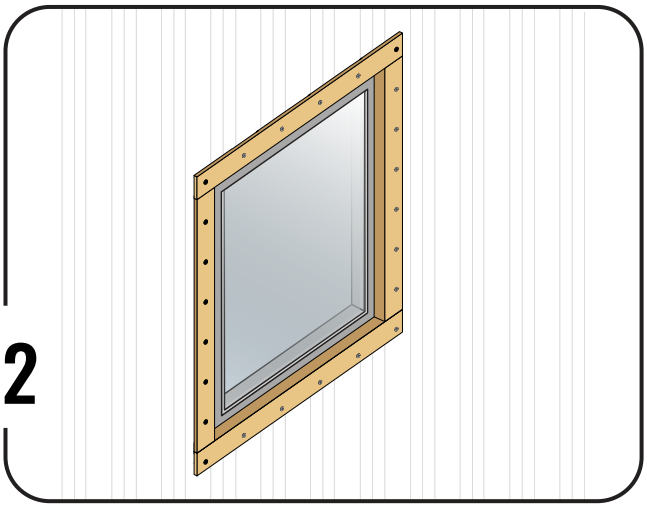

Allow sealant to cure fully before exposing the installation to rain — typically 24–48 hours. The window system is now fully installed and weather tight.

Annual inspection checklist:

- Inspect all exterior sealant beads for cracking, lifting, or gaps. Clean the area with an alcohol wipe and reapply sealant wherever the seal has broken.
- Check the Z-flashing for lifting at the edges, dents, or gaps where it meets the container wall. Re-fasten loose sections and reseal the back edge.
- Look along the interior frame edges for any staining, damp spots, or soft wood — signs of moisture that has penetrated the frame. Locate and address the source from the exterior before re-sealing.
- Inspect all fastener heads on the exterior. Any bare steel showing around a screw head should be dabbed with exterior sealant to prevent rust from spreading.
- In climates with large temperature swings, check all fasteners for loosening caused by the thermal expansion and contraction of the container steel.

Use only a neutral-cure silicone or polyurethane-based sealant rated for exterior metal and wood contact. Avoid acetoxy-cure (acid-cure) silicones — these can corrode primed and bare steel surfaces over time

Window Care & Cleaning

Frame and hardware:

- Clean the window frame with mild soap and warm water applied with a soft cloth. Rinse thoroughly and wipe dry.
- Do not use abrasive pads, wire brushes, or solvent-based cleaners on painted or powder-coated frame surfaces — these will permanently damage the finish.
- Lubricate any hinges, latches, or sliding hardware annually using a silicone-based spray lubricant. Avoid petroleum-based oils, which attract dust and degrade rubber seals over time.

Glass:

- Clean glass surfaces with a streak-free glass cleaner and a lint-free cloth or a rubber squeegee. Wipe in one direction to avoid circular scratching.
- Remove bird droppings, tree sap, or similar contaminants promptly — prolonged contact can etch or stain the glass surface.
- Inspect the glazing seals (the gasket between the glass and the frame) annually. If the gasket shows cracking, shrinkage, or separation, contact your supplier for a replacement before moisture reaches the frame.
- If condensation appears between the panes of an insulated glazing unit, the internal seal has failed. The unit will need to be replaced — no field repair is possible for this condition.