clutchit

CLUTCHIT CHARGE

Instruction Manual



Compatible with Clutchit Mount

MagSafe Compatible | 15W Wireless Charging

www.clutchit.com | support@clutchit.com

INSTRUCTION MANUAL

WHAT'S INCLUDED IN THE BOX:

1. 1x Clutchit Charge Device (15W Qi Wireless Charging Pad)
2. 1x 20W Home Fast Charger
3. 1x USB-C to USB-C Charging Cable
4. 2x Thin Metal Discs (for non-MagSafe compatible devices/cases)



Clutchit Charge Device

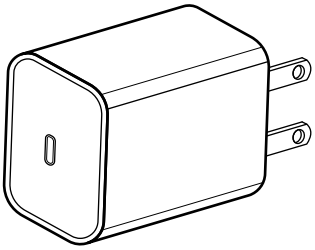

20W Home Fast Charger

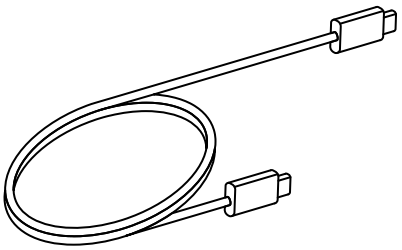

USB-C Charging Cable

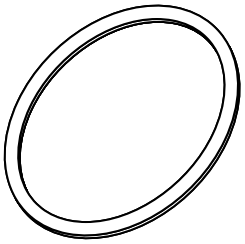

Thin Metal Discs

NOTE: THE CLUTCHIT MOUNT IS NOT INCLUDED WITH THIS PRODUCT AND IS SOLD SEPARATELY.

PRODUCT SPECIFICATIONS:

- Clutchit Charge Wireless Pad:
- Charging Standard: Qi Wireless Charging
- Max Output: 15W

COMPATIBILITY:

Works independently as a wireless charger
Attaches seamlessly to the Clutchit Mount to convert it into a MagSafe-compatible system

20W HOME FAST CHARGER:

Input: 100–240V ~ 50/60Hz
Output: 5V ⎓ 3A, 9V ⎓ 2.22A, 12V ⎓ 1.67A

SAFETY & CARE TIPS:

- Do not expose to water or extreme temperatures.
- Use only the included charging components for best results.
- Clean with a soft dry cloth. Do not use abrasive materials.

For questions, support, or product updates, contact: **SUPPORT@CLUTCHIT.COM**
WWW.CLUTCHIT.COM

QUICK START GUIDE

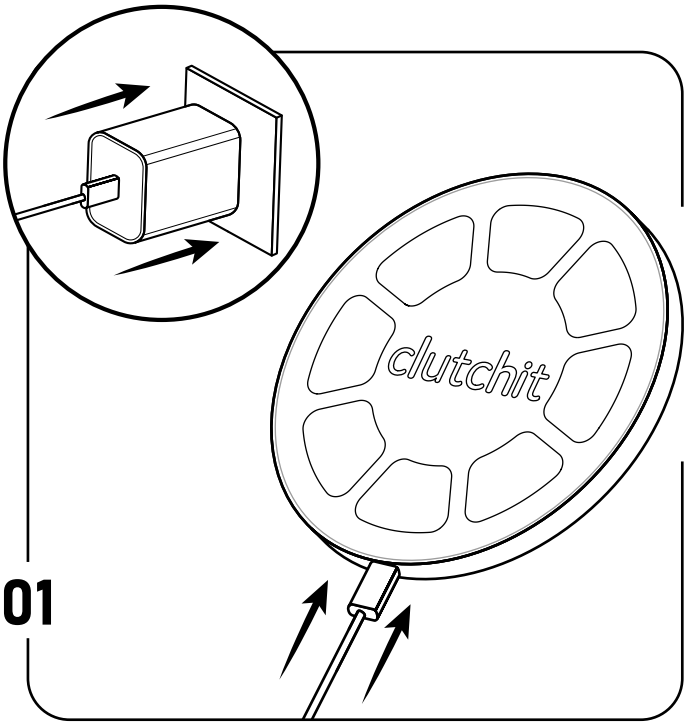

Step 1: Set Up the Charger
Plug the 20W Home Fast Charger into a power outlet. Connect one end of the USB-C to USB-C Cable to the Clutchit Charge device. Plug the other end into the power adapter.
Tip: For optimal performance, always use the included 20W charger.

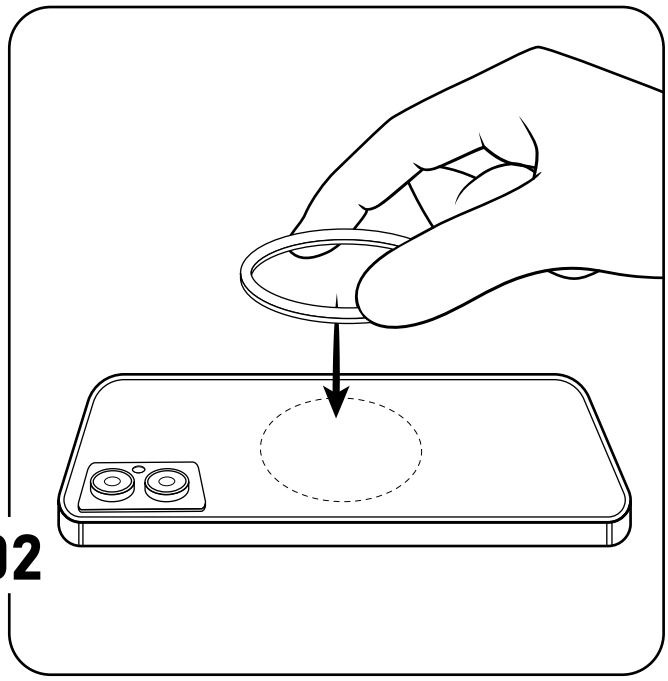

Step 2: Prepare Your Device
If your phone or case is MagSafe compatible, you're ready to go. If your phone or case is not MagSafe ready, peel the backing off one of the included metal discs and firmly adhere it to the center of your device or case. Let it sit for 5 minutes for best adhesion.

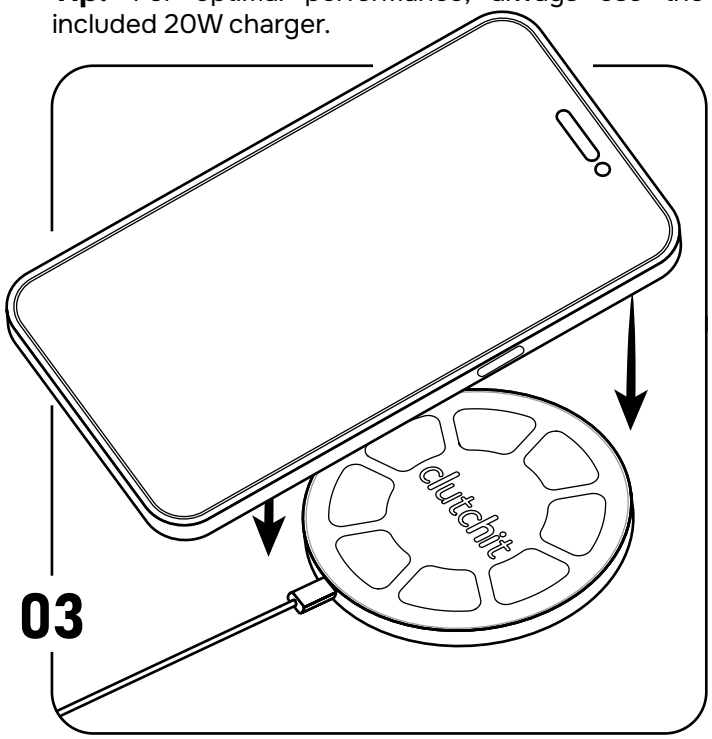

Step 3: Charging Your Device
Place your device directly on the Clutchit Charge surface. Make sure it aligns magnetically and begins charging.

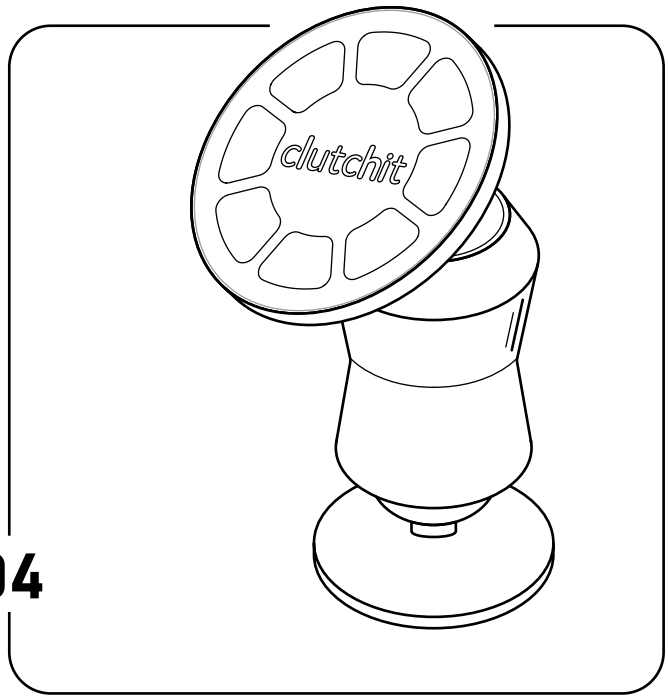

Step 4: Mount Compatibility (Optional)
Clutchit Charge magnetically attaches to the original Clutchit Mount, instantly converting it into a MagSafe-compatible mount. Simply snap Clutchit Charge onto your Clutchit Mount and enjoy a secure hold and wireless charging in one solution.

USAGE SCENARIOS

IN THE CAR:

Attach Clutchit Charge to the Clutchit Mount for hands-free navigation while wirelessly charging.
Keeps your phone secure on bumpy roads with MagSafe strength.

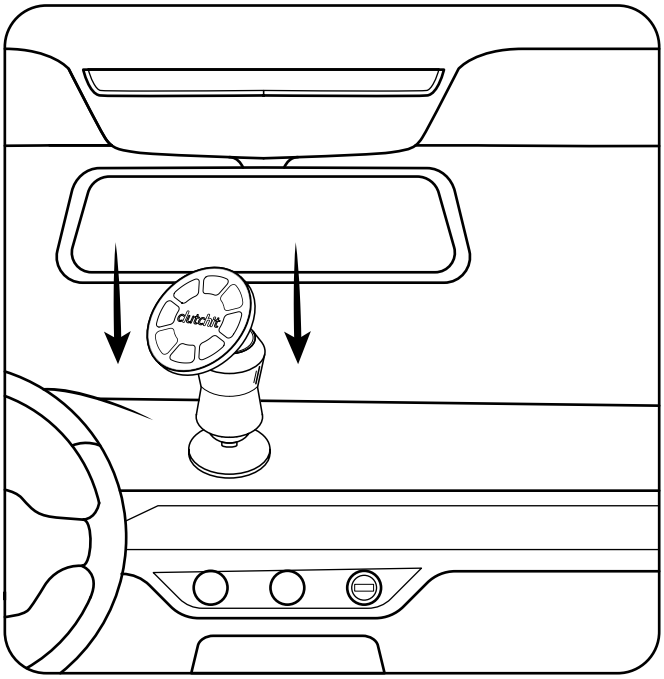

ON YOUR DESK:

Use as a wireless charging stand during work or video calls.
Keeps your phone accessible and charging while you multitask.

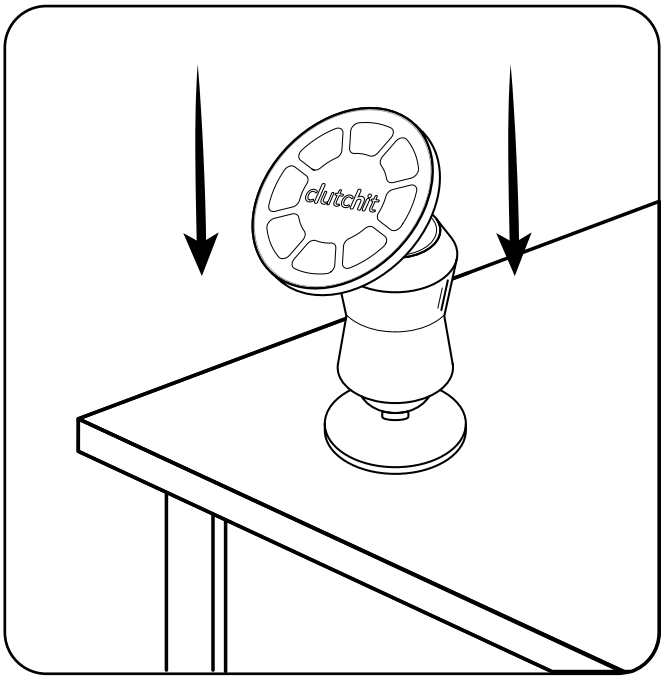

We'd love to see how you use Clutchit Charge! Tag us on Instagram @clutchit and @clutchaccessory or share your setup with #ClutchitCharge for a chance to be featured on our page.

www.clutchit.com | support@clutchit.com