CABLE RAILING INSTALLATION INSTRUCTIONS

INSTRUCTION MANUAL

PLEASE CONSIDER THE BELOW BEFORE YOU BEGIN:

Before beginning installation, it is important to know that our recommendation is to have a Licensed Contractor perform all installations of our products. This will ensure code compliance and safety in your local area.

Please refer to local building codes to make sure you are compliant with local and regional codes for cable railing installation.

We provide all the materials needed for the install of your cable railing system.

The tools you'll need to also have for installation are:

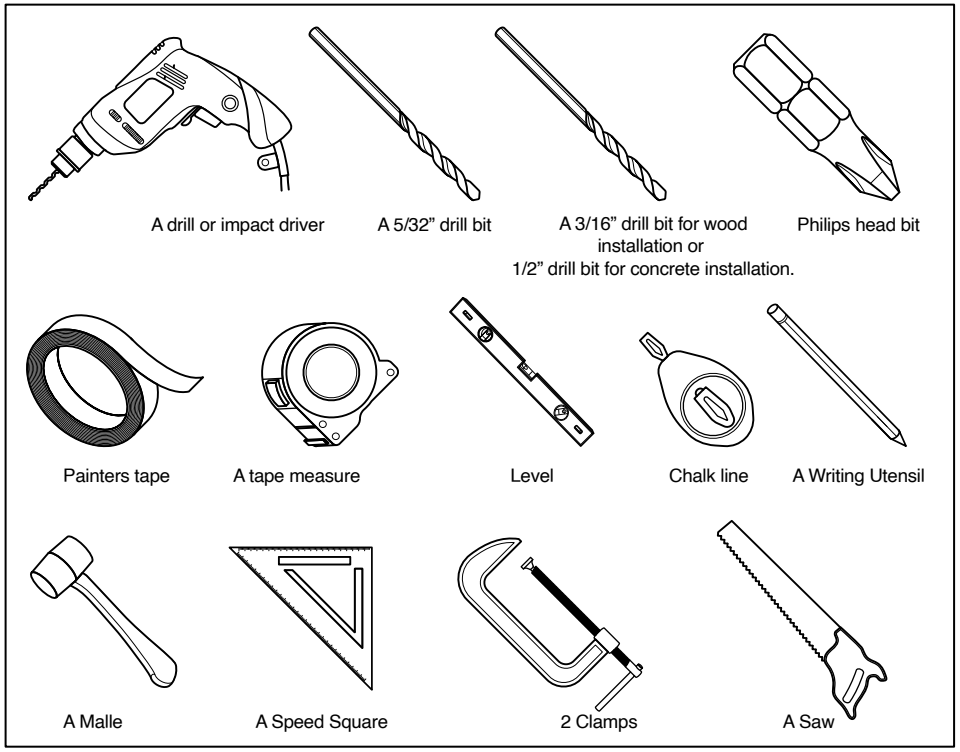

There are ONLY 3 Parts to Installing Your Cable Railing System:

1. **Installing the posts**
2. **Installing the handrail**
3. **Installing and tensioning the cable**

Each part has multiple steps involved, so please follow the detailed instructions below very closely.

PART 1: INSTALLING THE POSTS

STEP 1: LAYING OUT CABLE RAILING POSTS

Tools you will need for this part of the install:

A drill or impact driver	A 5/32" drill bit	A 3/16" drill bit	Philips head bit
Painters tape	A tape measure	Level	Chalk line A
Writing Utensil	A Mallet	A Speed Square	

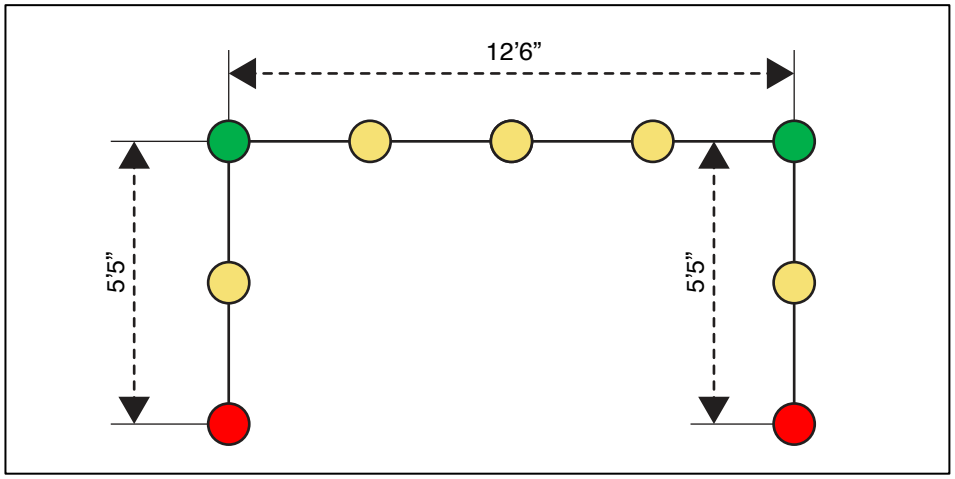

In order to properly lay out your posts for the project you will need to refer to the drawing you were sent by Ultra Modern Rails.

We sent you a drawing of your project during the quote process. Please print out that drawing, so that you can see the exact layout of your project. You will see color coded posts on you drawing. Those are the different types of posts for your project .

- Remove each post for it's packaging
- Place each post in it's appropriate position based upon your drawing
- Please note the measurements on your drawing. This will tell you exactly how far apart each post will be place.
- For example: The 12'6" section in the drawing above has 4 spans within it. Take 12'6" and convert it to inches which comes out to 150". Now divide that by the 4 spans in the section.
- That tells you each post will be placed 37 ½ " apart.
- Please follow the same steps for each separate run.

Important: Make sure that the holes of each post are aligned in the intended position based upon your drawing. There is a specific place for each post in your project. And placing a post in the wrong position can create a major problem with your install.

STEP 2: ALIGNING YOUR POSTS

Now that your posts are laid out, it's time to make sure that they are in perfect alignment before beginning the install process. Post placement is flexible. Depending on your situation, you can adjust the position of your posts to best align with your deck or balcony.

Meaning, that if you need to place your post 1.5" away from the house instead of 1" that is fine. You will need to decide on site, where the exact placement of each run will go according to your project. And in the same way, if you need to move the posts ½" away from the edge of your deck or balcony, that is fine.

The key is making sure that once you decide on placement, you need to make sure they are all placed in the exact same spot and lined up exactly.

When placing your angled posts on stairs, you'll want to place them as close to the edge as possible, to make sure the bottom run of cable will clear the tread nosings. This is usually about 1 to 1 ½" away from the edge of the stairs.

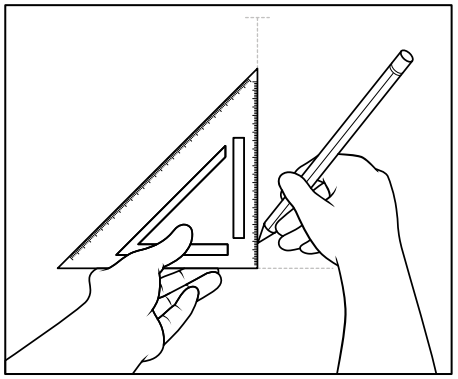

Speed Square For Alignment:
Use a speed square to make sure that your post is square to the edge of the install area. See the picture above. This will ensure that each post is aligned properly so that the holes line up.

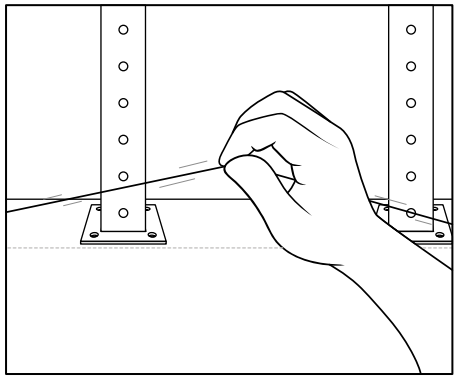

Chalk Line or Laser Level:
Once you have decided on the exact positioning of your posts, you will measure and mark your placements. Use a laser level or chalk line to run a straight line to make sure your posts are in a consistent line. If the line is not consistent, you will have issues mounting your handrail.

If you are building an angled run for stairs, you should run one cable through the bottom hole on each post before install to make sure the cable clears the tread nosings.

STEP 3: PRE-DRILL MOUNTING HOLES

Now that you've confirmed the placement of your posts, mark the location of all your mounting holes with a pen or pencil.

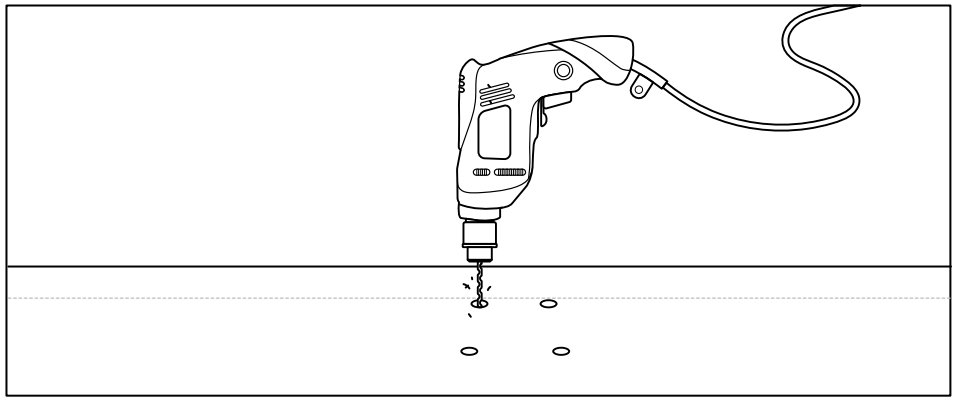

Before drilling, you need to make sure that if you are installing on wood, you have proper blocking in place for the lag bolts to screw into. Our general recommendation is to have a triple 2x8 blocking in place for surface mounted posts. And a double 2x8 for side mount posts. You will need to check your local code and building guidelines to confirm the amount of blocking you need in your area.

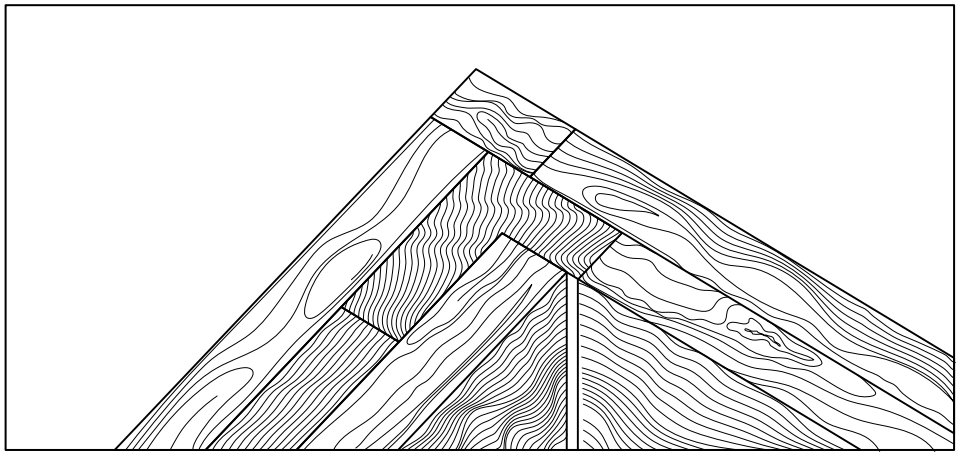

Removing each of the posts, use a 3/16” drill bit to pre-drill all mounting holes if installing into wood. If installing into concrete, you will want a 1/2” drill bit to predrill the holes for your concrete expansion screws to go into.

STEP 4: MOUNTING AND LEVELING POSTS

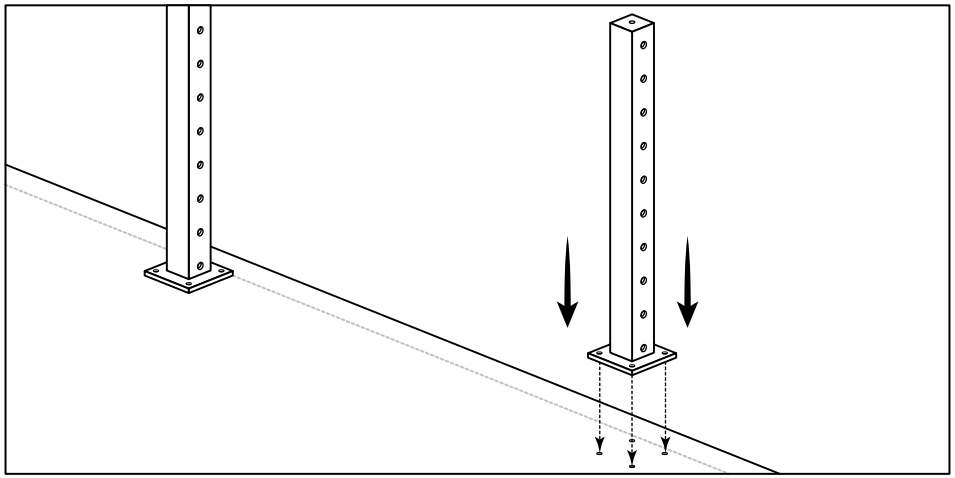

Replace the posts and check to be sure your posts are level prior to populating all of your pre-drilled holes with the provided mounting screws. Use a level on the side of the post to check for level. If it is not level, you can use composite shims to level out the post. These are easily purchased from Home Depot or other hardware store for a few dollars.

If installing into concrete, drill a depth of about 2 ¼ to 2 ½ “ for the expansion bolts. Test one first. Drill to 2 ¼” and place your post back on top. Make sure you have enough tread to be able to screw the bolt on to the expansion screw. Once you find your desired depth, you can drill the rest of the holes.

Once it is level, screw in your post bolts or attach your expansion bolts. Lastly, slide your post base cover over top of the post, making sure to let it down carefully so it does not scratch the powdercoat. Repeat this step for each of your posts.

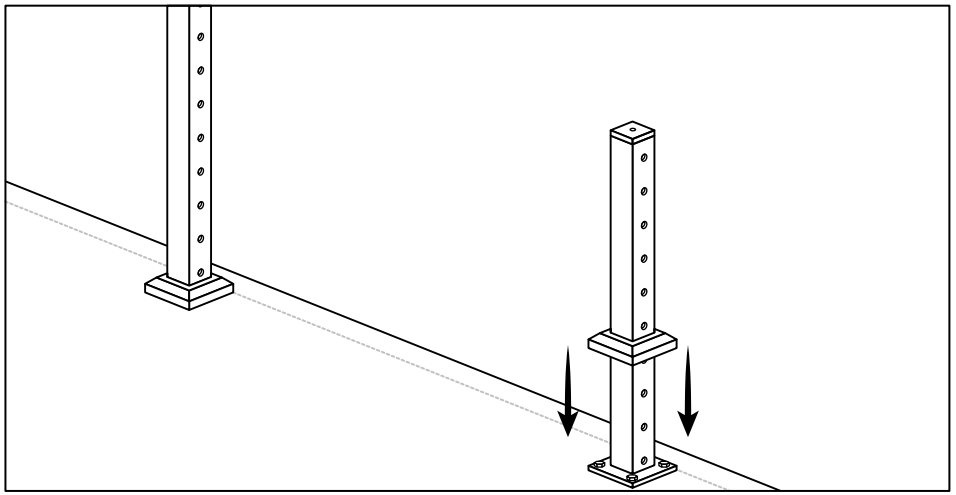

Before you get started with your installation, take a few minutes to get familiar with how our system installs. Below you will see our most common layouts. Most likely, your project fits one of these designs. Make sure you get familiar with how all the parts fit together. Our recommendation is that you lay out all your parts and pieces to match the designs below, before you get started with your install.

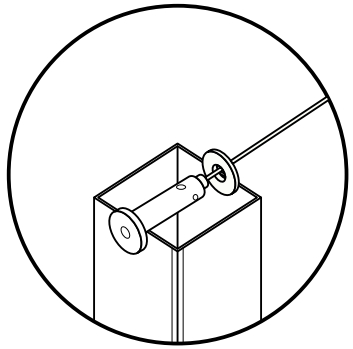

1

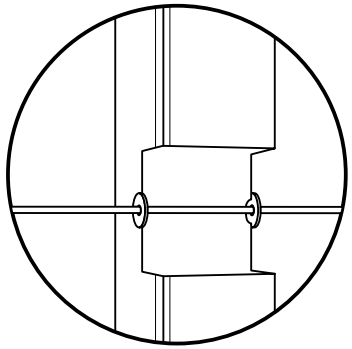

2

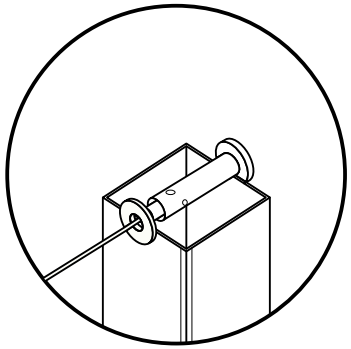

3

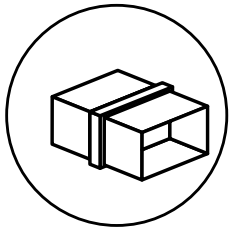

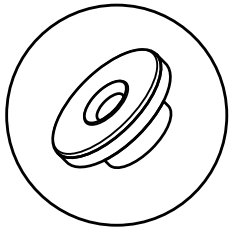

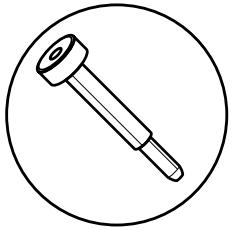

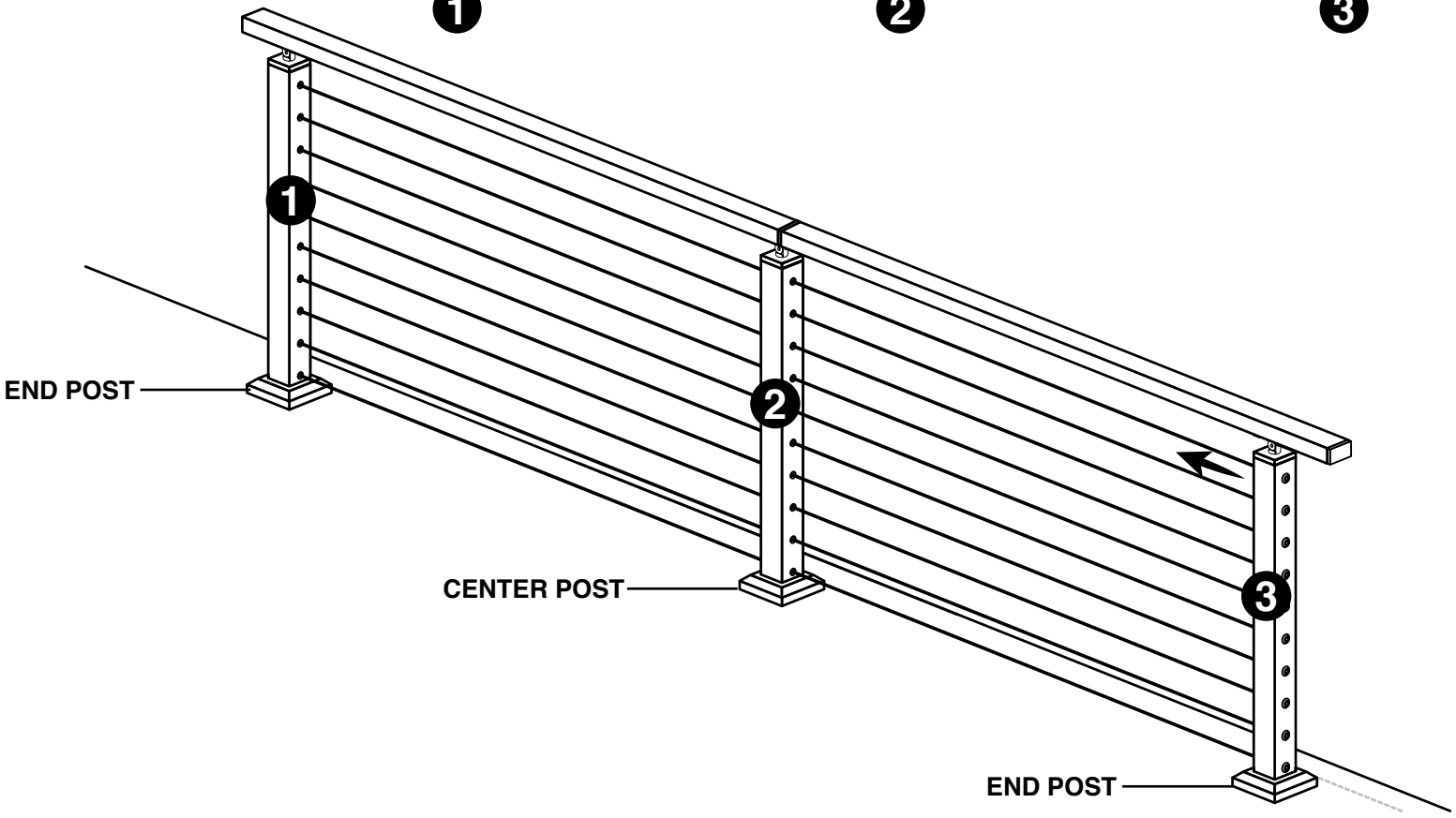

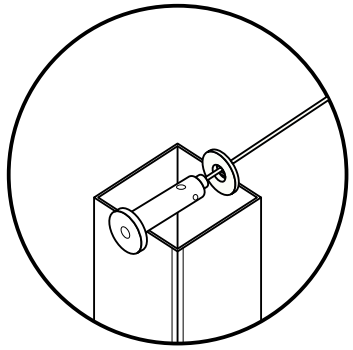

1

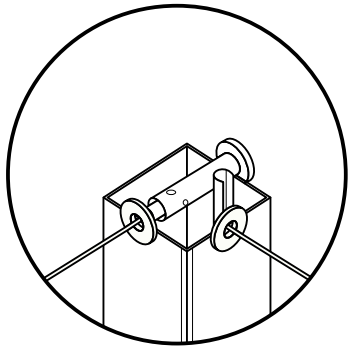

2

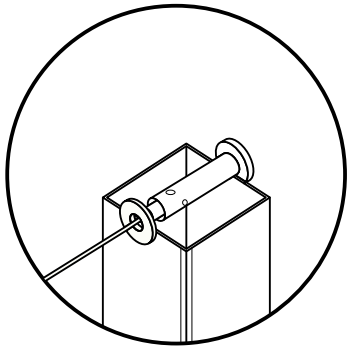

3

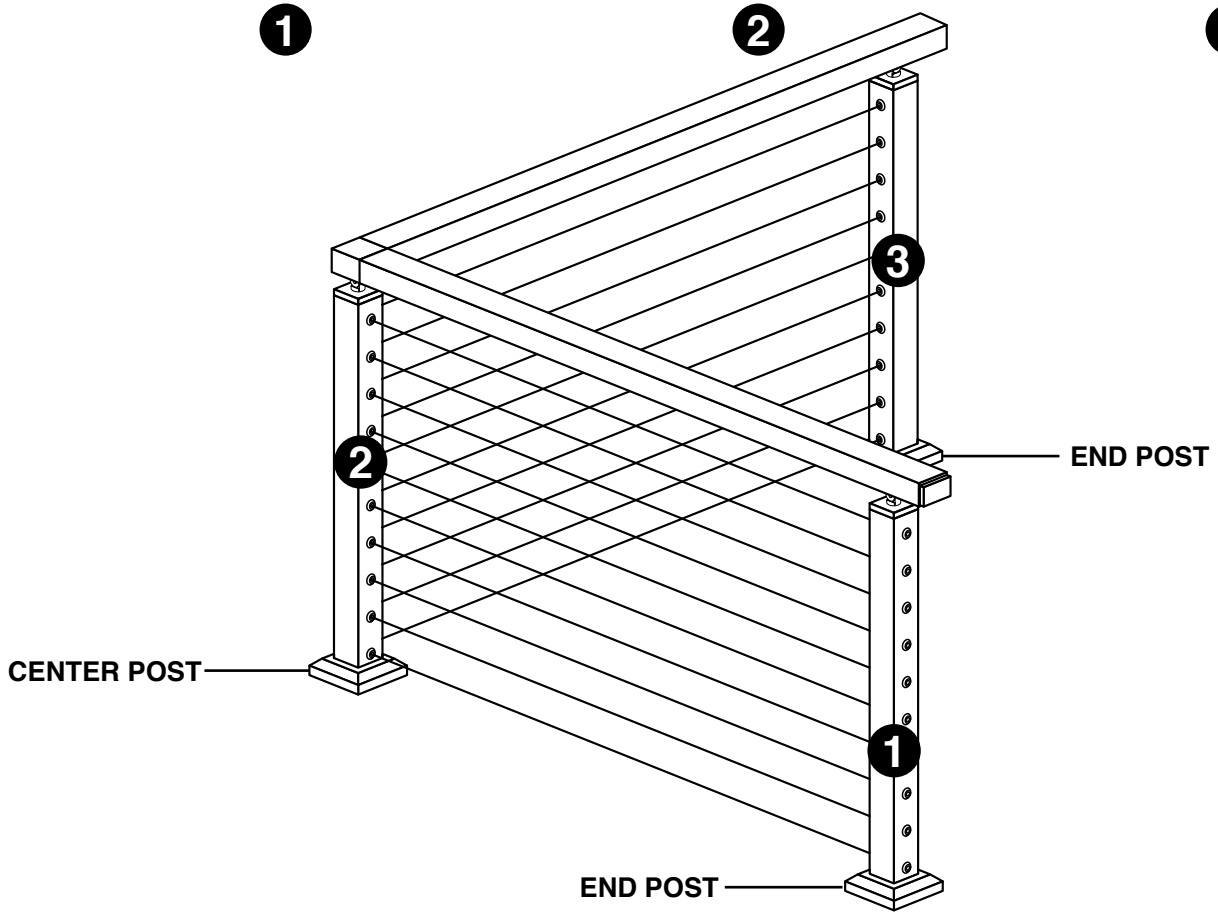

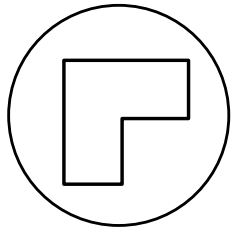

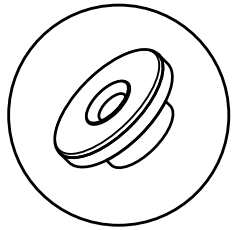

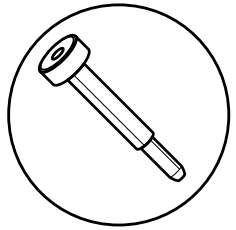

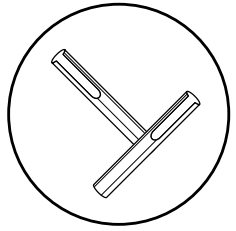

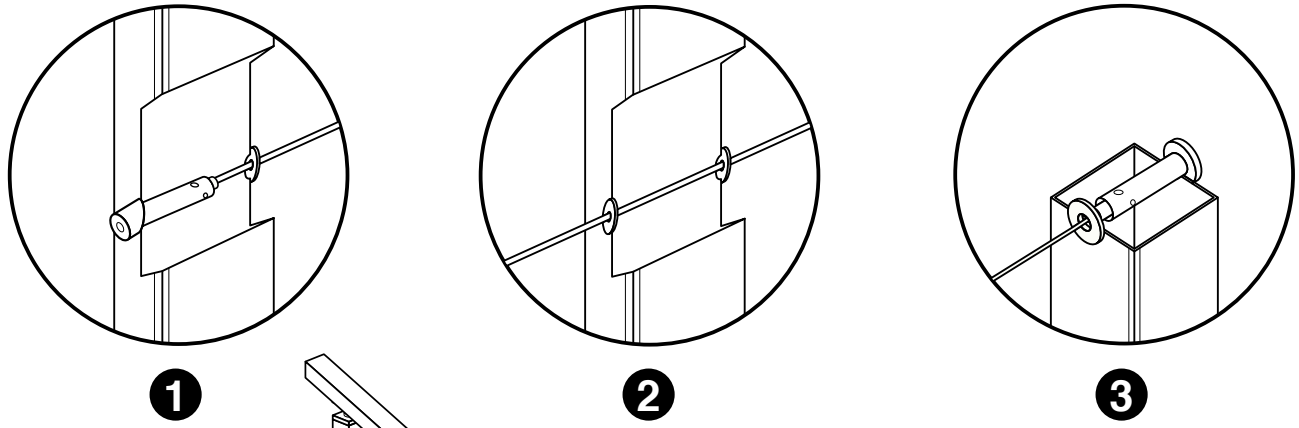
1
2
3

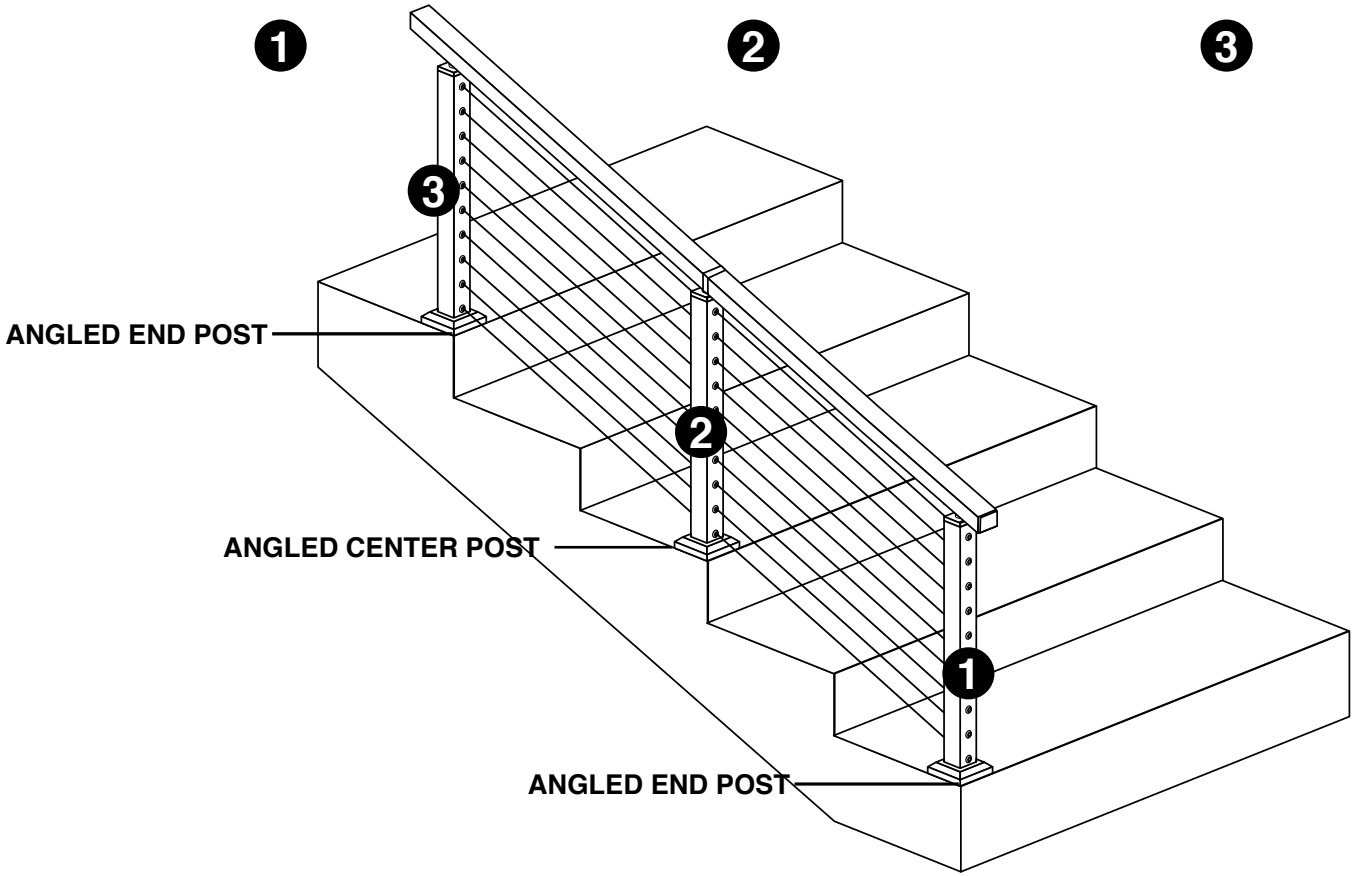
3
ANGLED END POST
2
ANGLED CENTER POST
1
ANGLED END POST

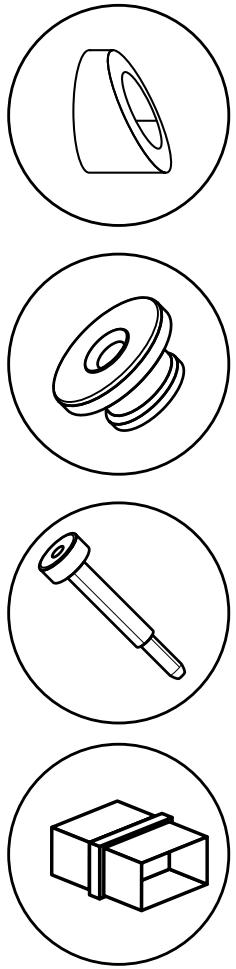

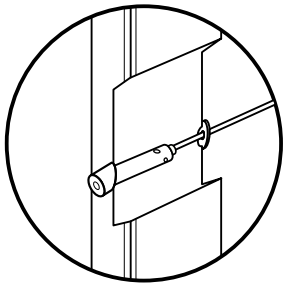

1

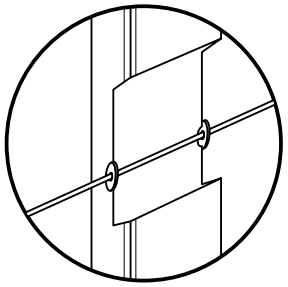

2

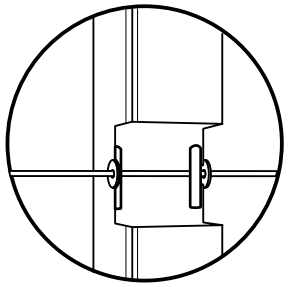

3

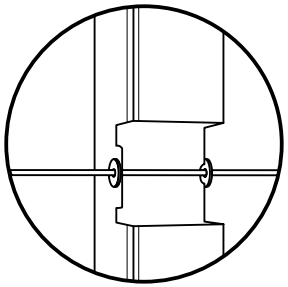

4

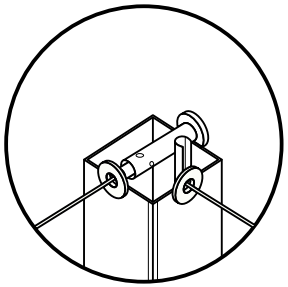

5

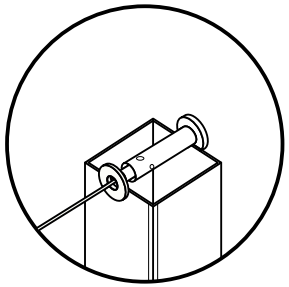

6

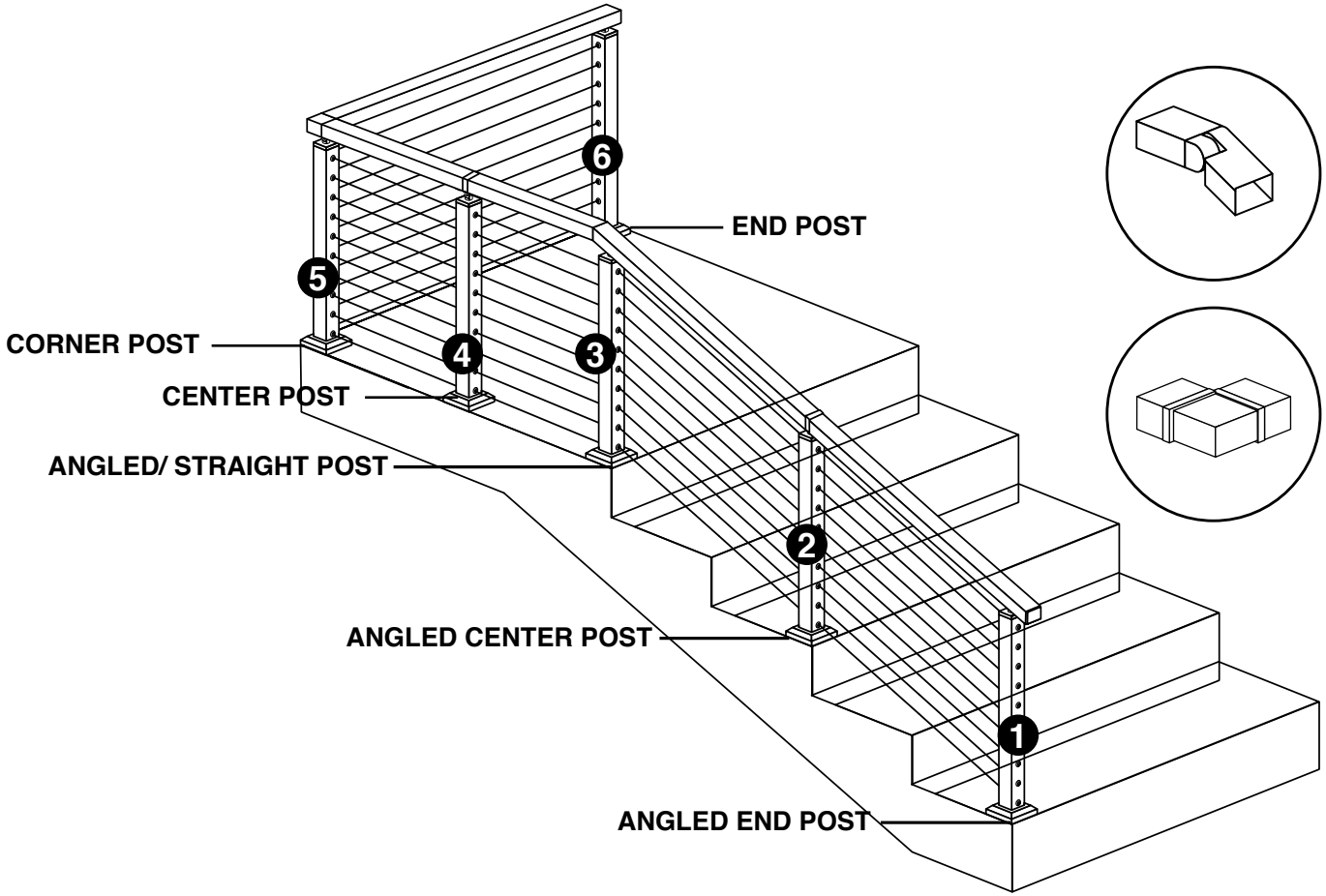
6
END POST
5
CORNER POST
4
3
CENTER POST
ANGLED/ STRAIGHT POST
2
ANGLED CENTER POST
1
ANGLED END POST

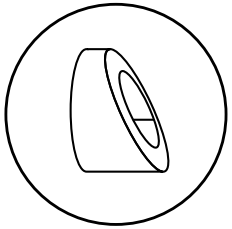

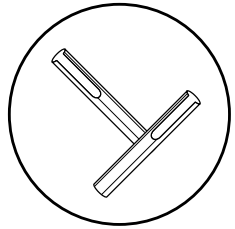

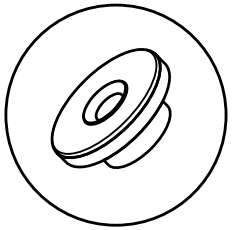

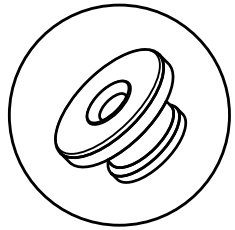

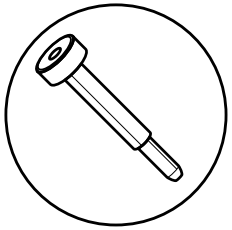

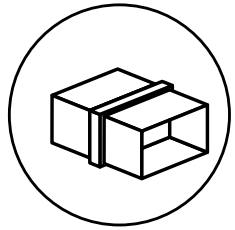

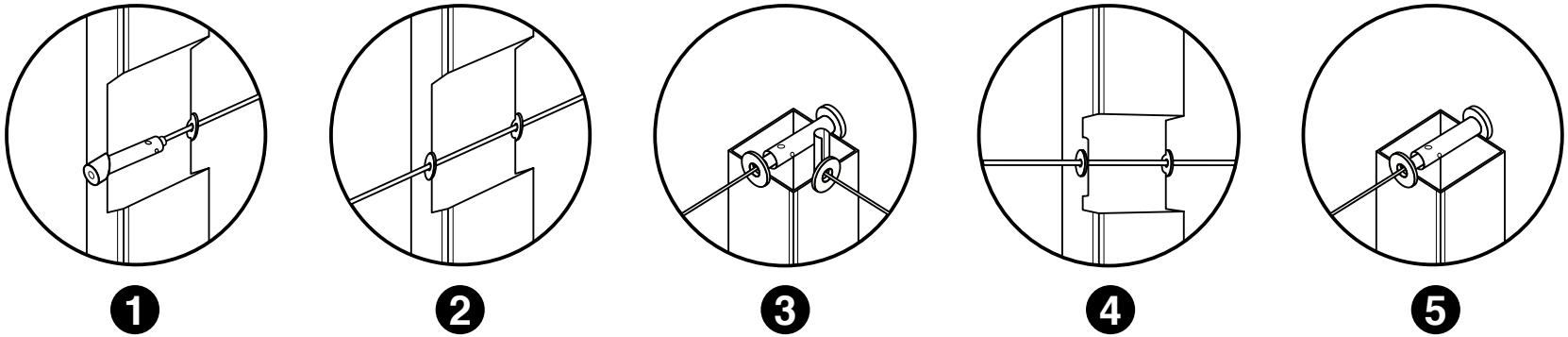
1
2
3
4
5

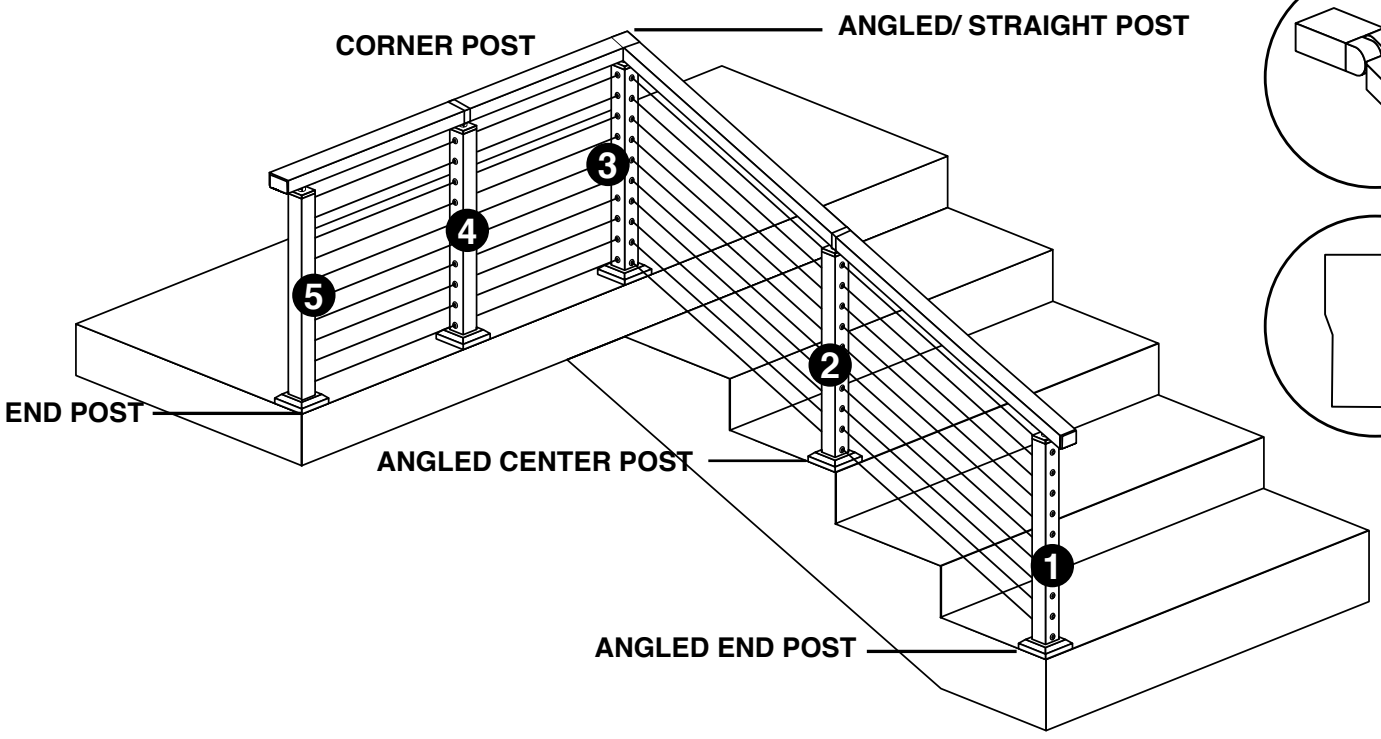
CORNER POST
ANGLED/ STRAIGHT POST
END POST
ANGLED CENTER POST
ANGLED END POST
1
2
3
4
5

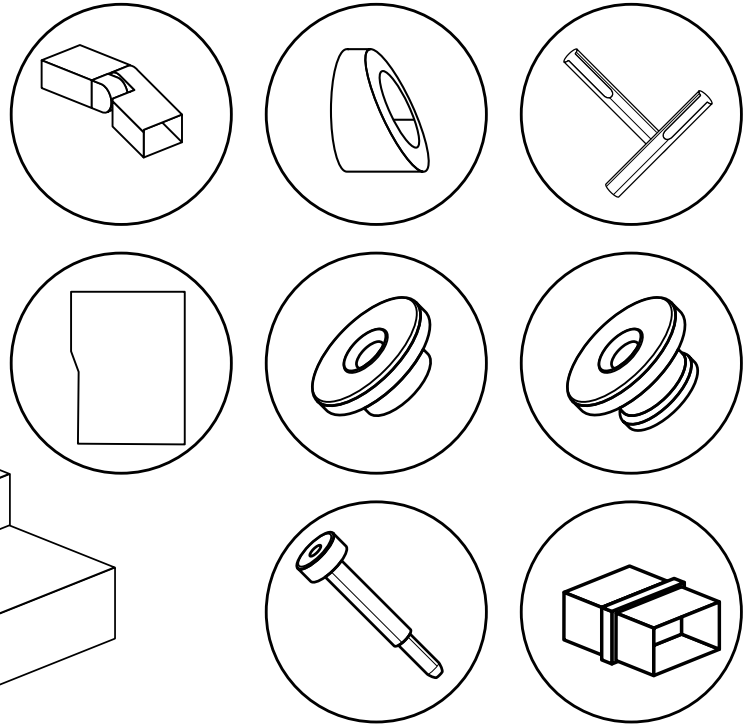

PART 2: INSTALLING THE HANDRAIL

Tools you will need for this part of the install:

A drill	A 5/32” drill bit	Painters tape	A tape measure
A Writing Utensil	A Mallet	2 Clamps	A Saw

STEP 1: ATTACHING THE HANDRAIL BRACKET

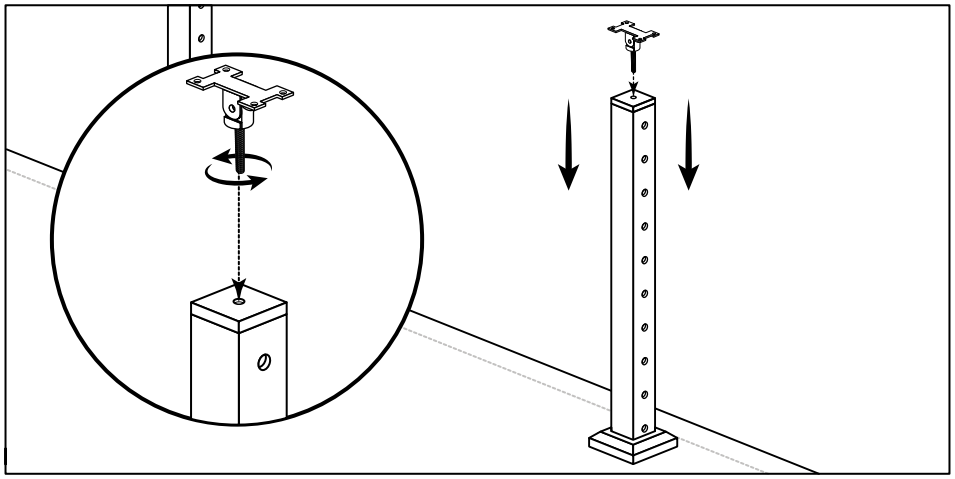

First, you will want to attached the provided handrail bracket to the top of your posts, and attach it with the provided screw. If your system utilizes corner posts, make sure the bracket is oriented so it turns the corner the correct way. The system comes with a universal handrail bracket that will allow it to pivot on the angle of your stairway for angled posts.

The handrail bracket will screw down into the hole at the top of each post. Screw it down hand tight as much as you can. Use a rubber mallet to tap it tighter, and make sure that it lines up with the direction of your handrail.

STEP 2: MOUNTING STAINLESS STEEL HANDRAIL TO RAILING POSTS

Before you mount your handrail to the posts, make sure you’ve secured and installed all your cable posts to your wood or concrete surface.

Measuring Handrail

Once again, your drawing will tell you exactly how long your handrail sections need to be. Look at your drawing, and you will see a gap between every post.

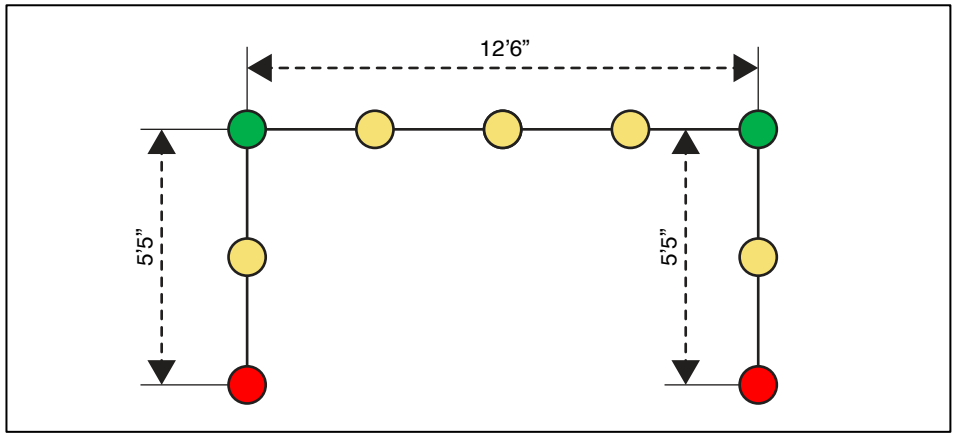

A new piece of handrail will go between every post. Our handrail is cut in 48” sections. So the maximum span between posts is 48”. This distance keeps you code compliant in every state.

Once again, take the example above of 12’6”. That is 150”.

- We can see from the drawing above that there are 4 sections in that 12’6” span.
- So we will need 4 handrail sections.
- Let’s take 150” and divide it by 4. That give us a distance of 37.5”.
- So each handrail section will be 37.5” for this span.

An end post handrail section will mount fully on the end post handrail bracket.

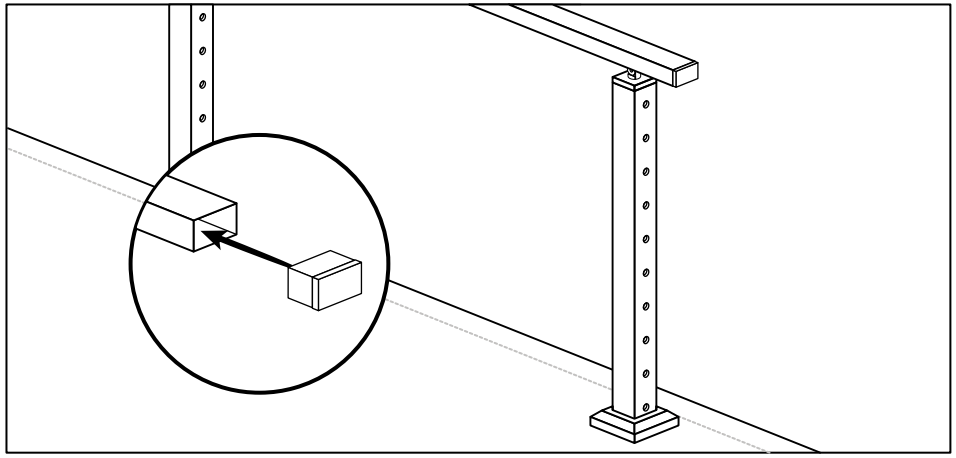

And then mount on half of the next post, connected by a stainless steel connector. See the image below.

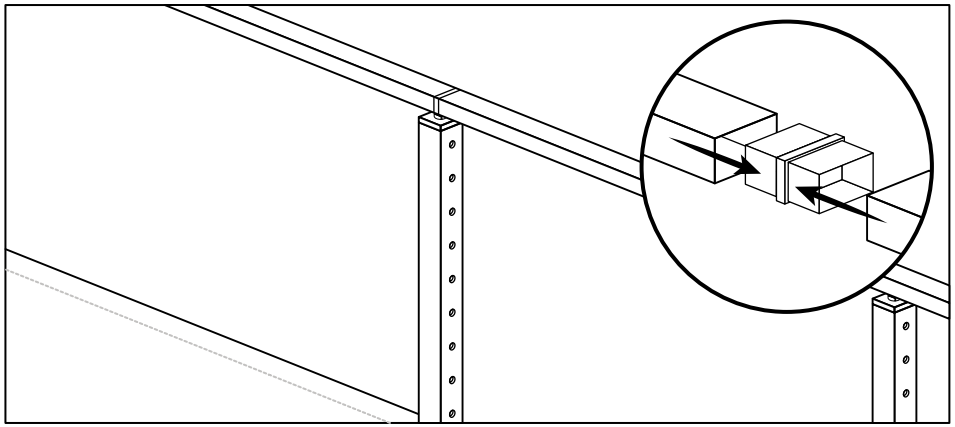

Once you know the length of your handrail section, put painters tape on the handrail at the desired measurement, to guard the area and use a sharpie to mark your cut line. For connections on a center post, you will utilize the 180-degree handrail connector to connect two sections of handrail together on top of the post. See image above. On corners, you will utilize the 90-degree handrail connector to make a clean connection for corner sections. The 90 degree connector is a piece of handrail cut at 90 degrees. Use it just like a piece of handrail. You will mount the 90 degree connector directly onto the handrail bracket.

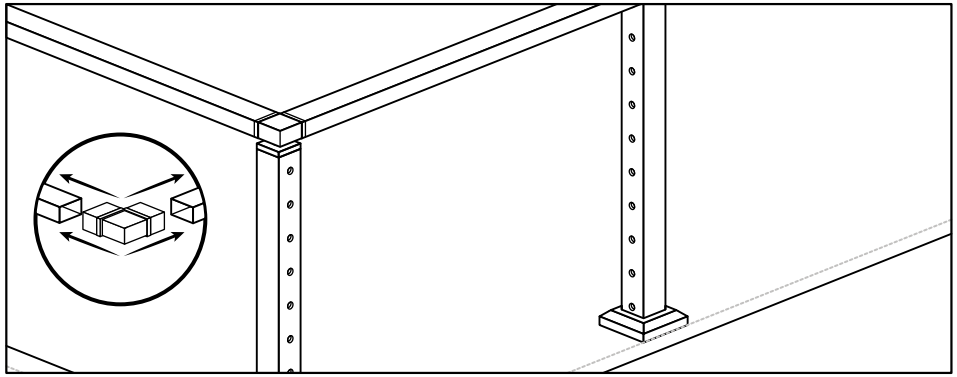

For Random angles on a vertical plane like stairs you will use the adjustable handrail connector.

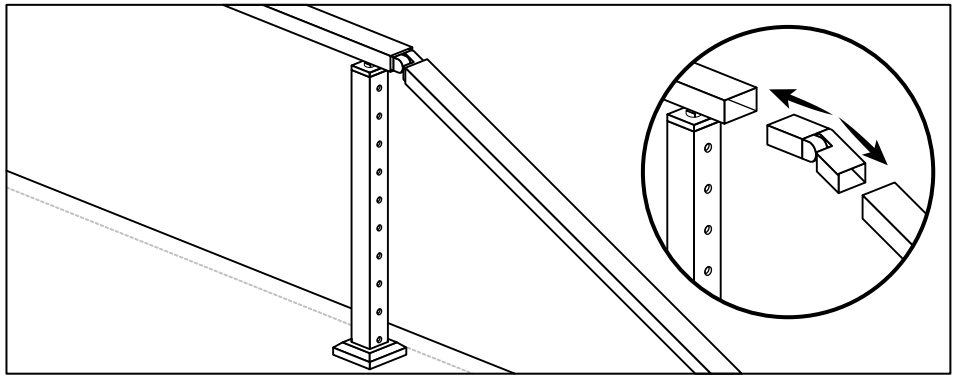

Each of these connectors fits in very snug to the handrail. So you will need to use a rubber mallet or dead blow hammer to tap them into the handrail. Go slow. They will fit. They are meant to fit in tight, and create a seamless handrail connection.

Cutting Handrail

Now that your handrail is measured and marked with painters tape, it is time to make the cuts.

We recommend using a chop saw or skill saw to cut your handrail. Make sure to use a blade suitable for cutting stainless steel and as always secure the handrail with clamps to keep it from jumping.

Once you have made your cut you will now attached the end caps or connectors to their proper ends. For end caps, line them up with the opening in your handrail and, using a rubber mallet, gently tap it into place.

Repeat this step on the other end of the handrail.

For all other connectors you will insert into their proper end and also gently tap it into place with a mallet when needed.

Mounting The Handrail

Place the handrail section on top of the handrail brackets making sure that it is in the desired position. Then you will want to mark your screw holes for each connection, using a pencil, so that you can pre-drill all holes using a 5/32" drill bit. Once the holes have been pre-drilled, use the provide mounting screws to attach the handrail. You've installed the first handrail in your system!

We recommend working one handrail at a time rather than cutting all your handrail first. When you mount a handrail, it will pull posts together to secure the system. If you cut all your handrail first, this will make your measurements inaccurate

PART 3: INSTALLING AND TENSIONING YOUR CABLE

Before you begin installing your cable wire, make sure that your posts and handrail are firmly mounted.

Tools you will need for this part of the install:

- Included Wire Cutting Tool & Hydraulic Crimping Tool
- Tape measure
- Plyers
- Sharpie
- J-B Weld Superweld Adhesive (Can be purchased at Home Depot)

STEP 1: TENSIONING THE FIRST END POST

You will tension 1 run at a time. Each run is a separate run of cable. You will NOT wrap the cable around corner posts. This weakens the cable over time and can cause failure in the system.
Look at your drawing once again, and see each run:

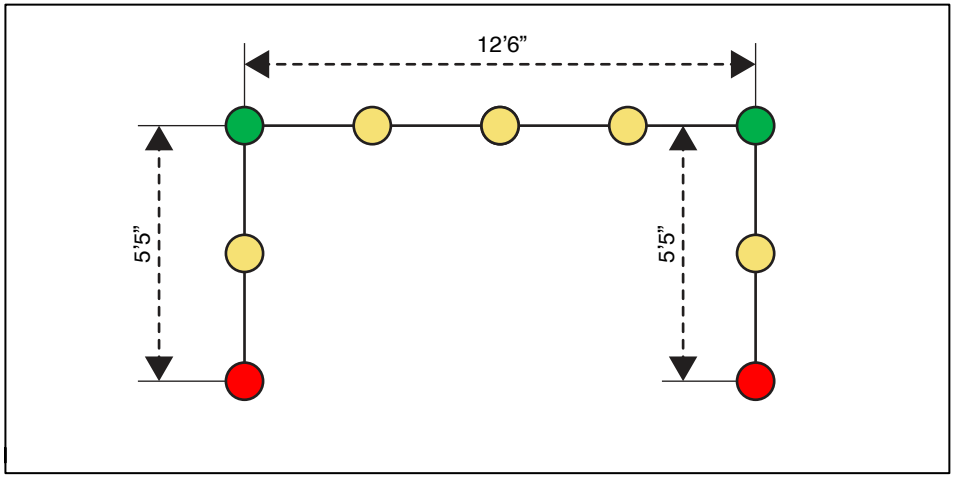

In this example above, we have 3 total runs of cable. One on each side, and one long one in the front.

Starting with an end post, marked RED above. Leave your cable on the spool, run the loose end through the middle hole of all your posts of your run.

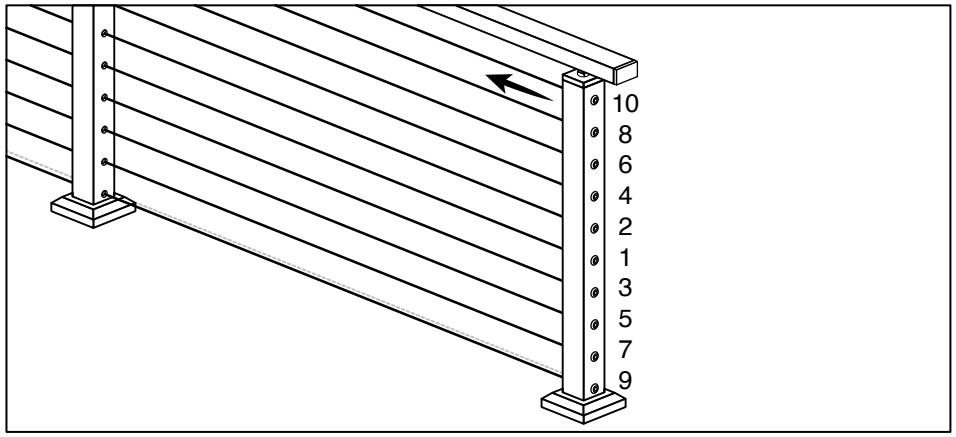

Make sure you put a cable sleeve on the cable for each hole that needs to be filled with a cable sleeve prior to tensioning the cable.
⚠ ***Do not place the cable sleeve inside the hole yet. You will do that after the cable is hand tight.***
You will have up to 2 different types of cables sleeves depending on your specific installation:

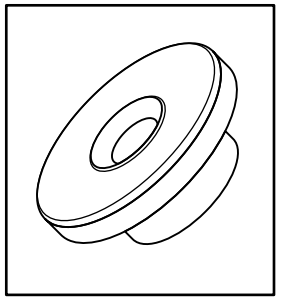

Regular Cable Sleeve

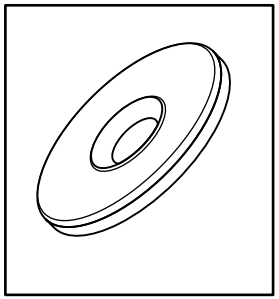

End Cable Sleeve

So depending on the post you are using the cable sleeve on, you will use a specific sleeve above.

- Center posts on flat runs receive the Regular Cable Sleeve
- All other posts that tension will receive Cable Sleeves

Now that you have a cable sleeve on the run, you will attach a Cable End to the cable to begin the tensioning process.
You will have up to 3 different types of Cable Ends depending on your installation:

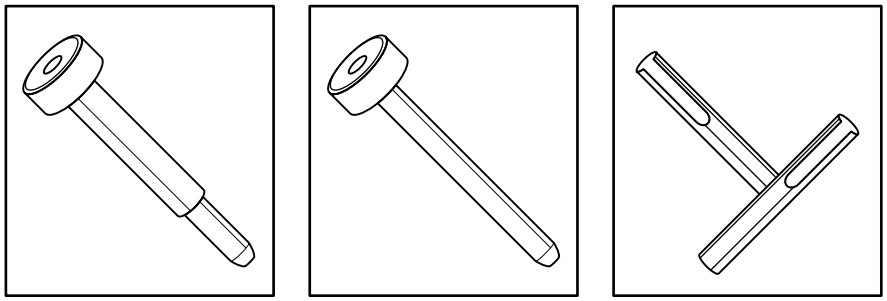

Regular Cable End ***FIxed Cable End*** ***Internal Cable End***

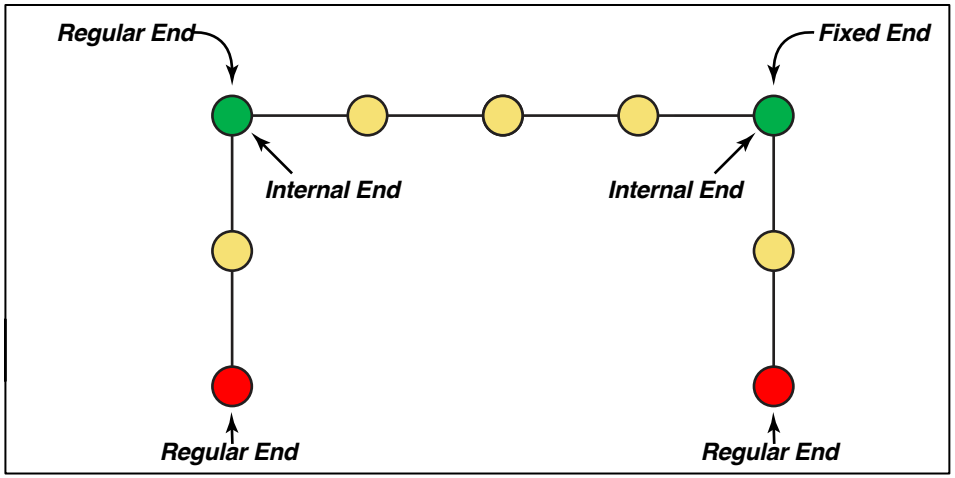

Adding The First Cable End

Assuming we are starting with the long run above, slide the end of the cable through the end hole of the first run.
On the outside of the post, put a Fixed Cable End onto the cable. Using the provided hydraulic crimping tool, you will crimp a Fixed Cable End onto the end of the cable, making sure to crimp twice. Crimp about a ½”away from the end of the Fixed Cable

For hydraulic crimper settings, use setting 4. This is 4mm which is the size of our cable. And you might need to pump the tool a couple of times to get it to start crimping. It is building up hydraulic pressure.

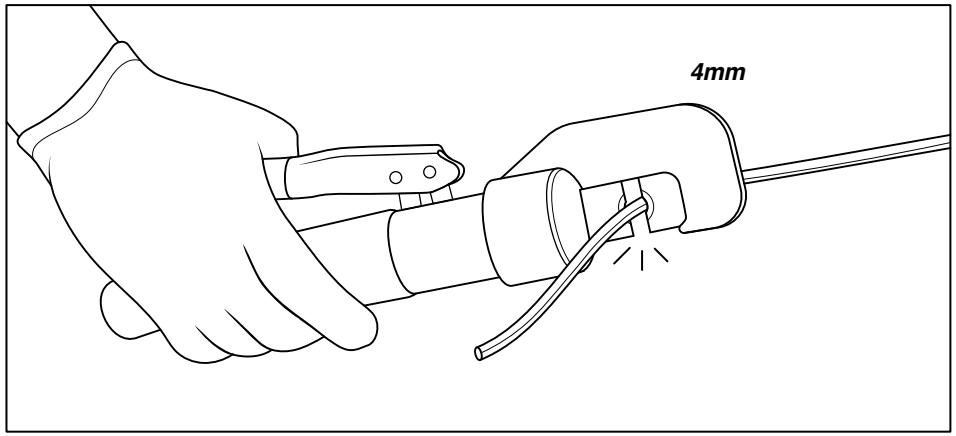

Pull the cable back toward the spool, so that the Fixed Cable End is seated flush against the post (See picture below for order of tensioning).

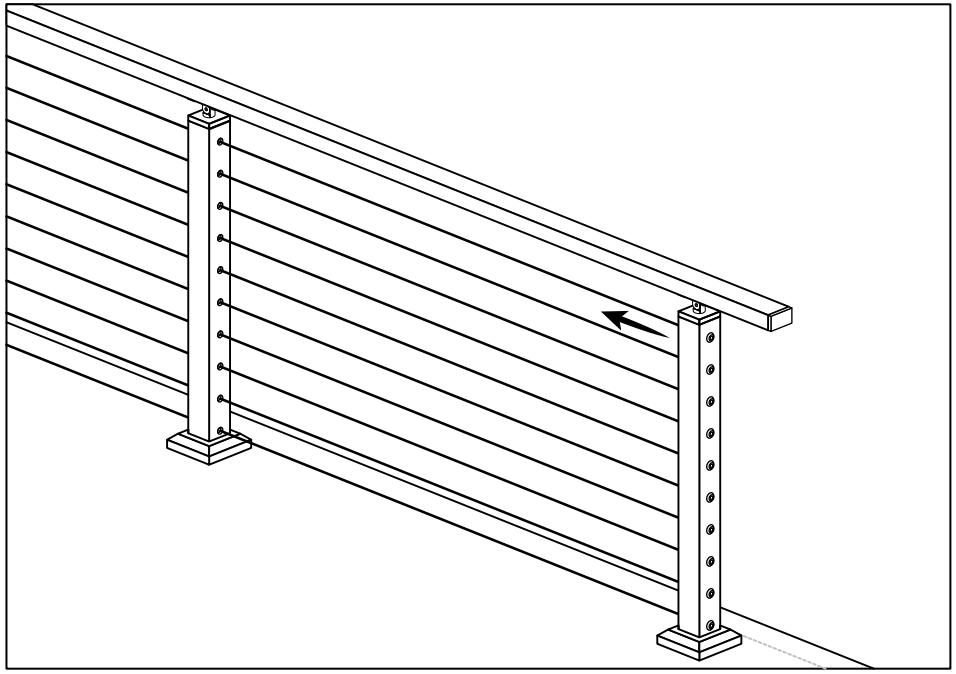

STEP 2: TENSIONING THE OTHER SIDE OF THE CABLE RUN

Now you will pull the cable tight to the other end of the run you are working on.
You will hold the cable tight against the outside of the post. And measure about 1 ¼" from the outside of the post. This is point B, where you will cut. Mark this point with a sharpie, or a piece of tape.
After you cut the cable, it will be able to go into the inside hole of the end post about ¾".

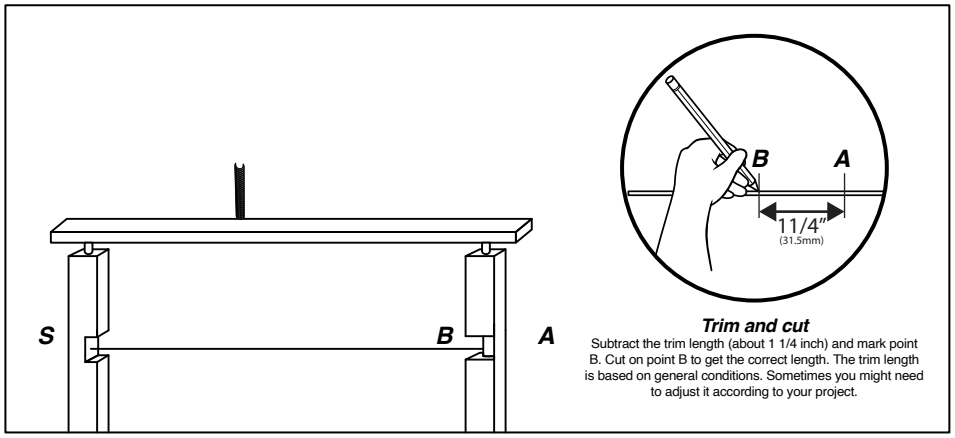

Attaching The Regular Cable End

Now that you have the cable cut to the correct length, make sure you put on your Cable Sleeves before you tension the cable. **You will not be able to undo this after it is crimped on.
Starting with the middle run, crimp a Regular Cable End onto the open end of the cable, using the #4 setting, making sure to crimp twice.
You will unscrew the Regular Cable End into 2 separate pieces. And you will only crimp on the thin piece onto the end of the cable.

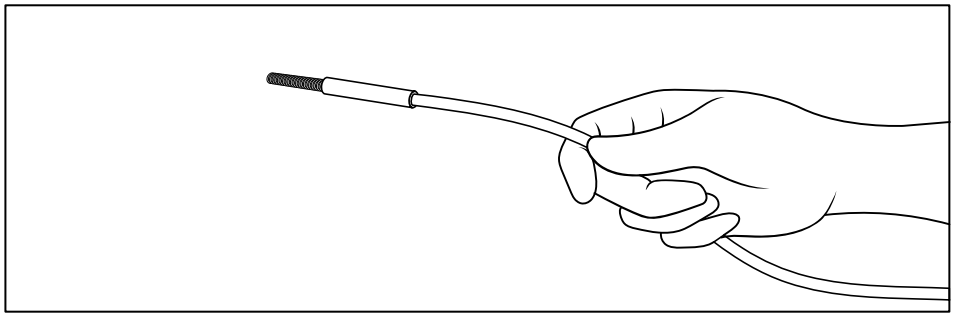

Once you have the thin piece of the Regular Cable End crimped onto the cable, you will feed the cable through the hole of the end post. Then you will take the threaded end of the Regular Cable End, and run it through the opposite side of the post, and thread it onto the threaded portion:

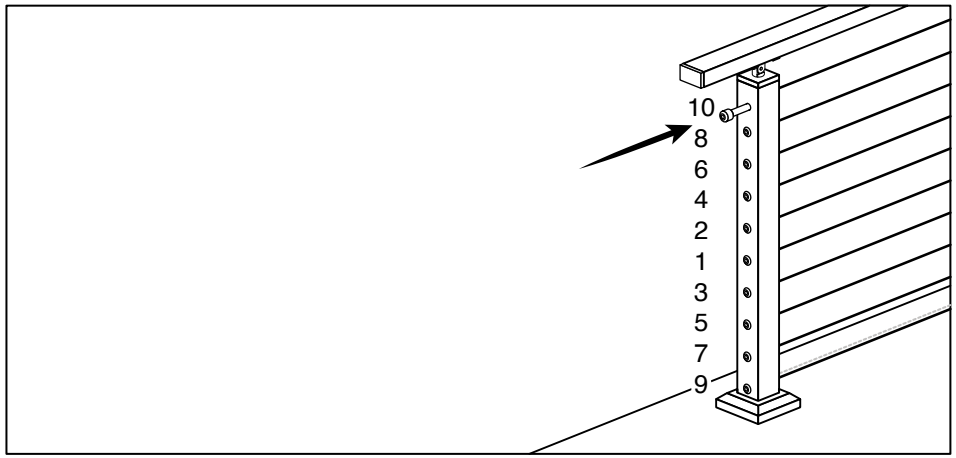

Using an allen wrench, you will tighten the Regular Cable End by turning it 1 or 2 turns. Just to get it hand tight.
Once it is hand tight, make sure to put your Cable Sleeves back into the holes (They can slip out sometimes during the install). It is always a good idea to use J-B Weld Superweld Adhesive to keep the Cable Sleeves in place for good. Once the cable gets tensioned fully, there is a lot of torque on the cable.

Repeat the above steps for each run of cable in the order listed above. You want to start in the middle, and work your way out.

Tensioning The Last End Post Cables

Once all of the cables have been run, and all hardware is mounted, make sure all of the cables are tensioned. Use your plyers if needed, to hold the cable in place while you tighten the tension receivers (Use a rag or cloth to protect the powder coat while using pliers). Make sure, again, to follow the diagram above when tensioning your cables.
You want to get the cables nice and tight. There is not spec for this part of the install. You do this by feel. They need to be good and tight, and able to withstand a decent amount of downward force without sagging more than an inch or two.

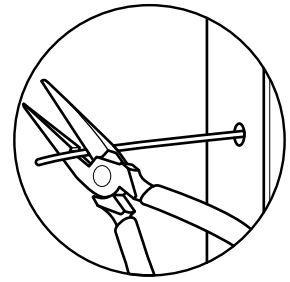

STEP 3: TENSIONING WITH INTERNAL CABLE ENDS

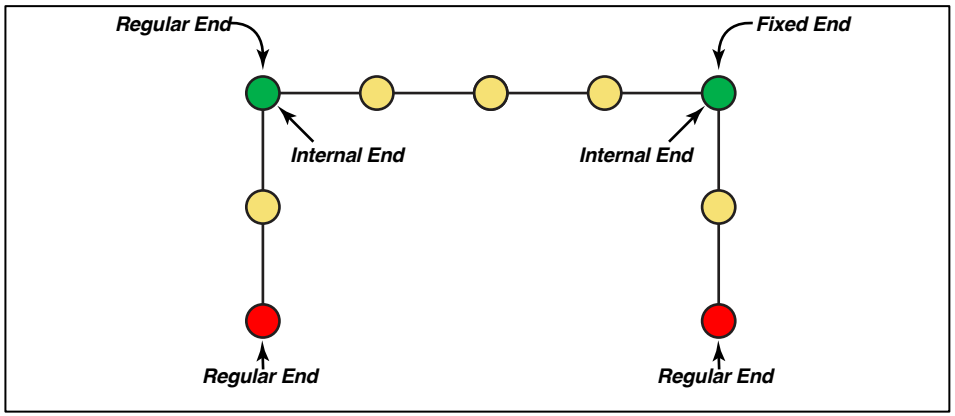

Look at this drawing above. On the short sides, you will see a Regular Cable End on the end posts, and in Internal Cable End on the Corner posts.
An Internal Cable End is used on corner posts so that we don't wrap the cable around the post. The Internal Cable End hides inside the post, and does not go all the way through.

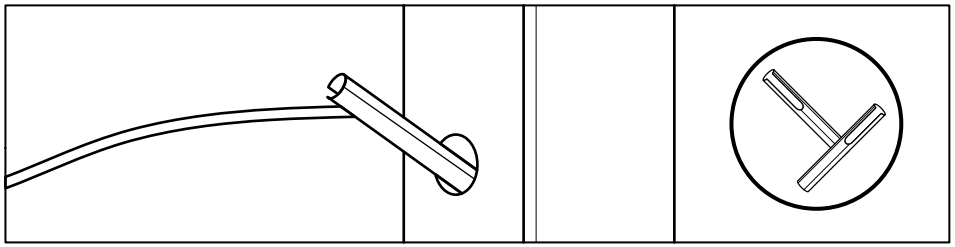

You will slide on your cable sleeves onto the cable before you install the Internal Cable End. Then you will crimp the Internal Cable End onto the cable using setting #4. Crimp twice. Crimp on the solid side of the Internal Cable End. That allows the cable to move in that slot, to that you can slip the Internal Cable End into the post hole, and it will sit perpendicular to the post, creating tension.

Note For Corner Posts:
Our Corner Posts generally have holes on 3 sides. You will tension one side of the run, with a Regular Cable End and a Fixed Cable End.
The other side of the run, will need to use Internal Cable Ends, and Tensioning Cable Ends. See the example above for details.

A Note For Stair Section:
The installation for stair sections is the same as laid out above. Just make sure to install the angled washer on the outside of the end posts for each end of the angled stair section.

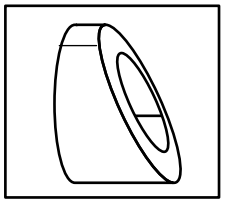

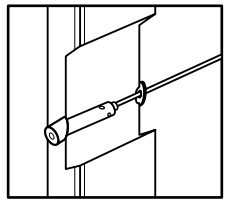

Another Note For Stair Sections:
The stair runs needed to be installed in a specific way so that the cable can clear the tread nosing.
You need to make sure that the first post of the stair run goes on the landing of the stairs. And the last post of the stair run, goes on the last step of the stairs, not on the landing.

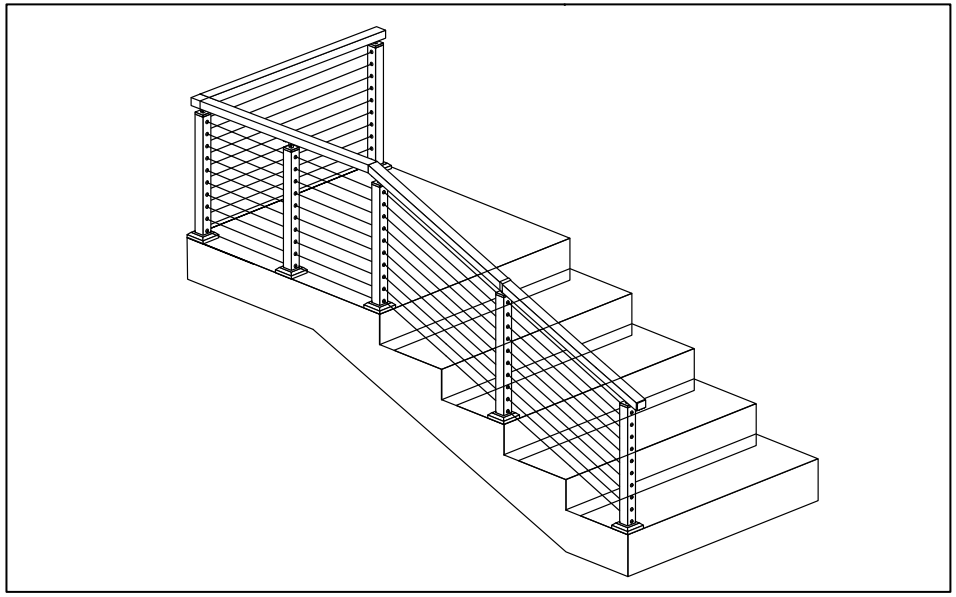

Additional Notes on Installation:
1. For stair and angled sections, it is the same process as a level section, except that you need to add an angled washer on the outside of the post for each end post.
2. Please refer to local building codes to make sure you are compliant with local and regional codes for cable railing installation.