

INSTRUCTION MANUAL

AUTO GLIDER POWER RECLINER

⚠ Please read all instructions before using the recliner.

Issue: 2026-06 v1

SAFETY

Thank you for purchasing this product. The product you have purchased combines state-of-the-art components with safety, comfort, and styling in mind. Please read and follow all instructions, warnings, and notes in this manual and all other accompanying literature before attempting to operate this product for the first time.

Please keep this manual with the riser recliner chair, or in a safe place. If there is any information in this manual which you do not understand, or if you require additional assistance for setup or operation, please contact your retailer. Failure to follow the instructions, warnings and notes in this manual and those located on your product, can result in personal injury or product damage and will void the product warranty .

SHIPPING AND DELIVERY

Before using your riser recliner chair, make sure your delivery is complete as some components may be individually packaged. If damage has occurred during transport, either to the packaging or content, please contact the retailer.

ELECTRICAL SAFETY

DANGER! To reduce the risk of electric shock:
Always unplug this product from the electrical outlet before cleaning or servicing.

WARNING! To reduce the risk of burns, fire, electric shock, or injury:

1. Unplug from the outlet before attaching or removing any parts.
2. Never operate this product if the power cord or plug is damaged, if the unit is not working properly, or if it has been dropped or exposed to water. Discontinue use and contact an authorized service center for inspection and repair.
3. Keep the power cord and plug away from heated surfaces and other heat sources.
4. To disconnect, return all controls to the off position, then remove the plug from the outlet.
5. When operating, make sure the power cord is clear of the base, legs, and moving mechanism to prevent damage to the cord or plug.
6. Do not strain, pull, or stretch the power cord.
7. Do not use extension cords or power strips with this product.
8. Keep out of reach of children. This is not a toy.



NOTE:
Make sure all internal plugs and connectors are fully and firmly seated before connecting the power cord to the wall outlet. Plugging in before all connections are secured may result in damage to the unit.

NOTE:
The USB ports (where applicable) are designed to supply 5 V DC and are intended for charging small devices such as smartphones and tablets only. They cannot be used to power or charge laptop computers (PC or Mac). Attempting to charge a laptop via the USB ports may cause damage to the laptop, the USB port, or both, due to incompatible voltage requirements.

ASSEMBLY INSTRUCTIONS

1

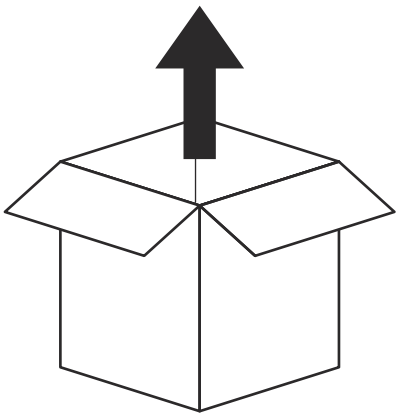

With a second person assisting, carefully open the outer carton from the top. Lift the recliner components out of the box and place them on a clean, stable floor surface.
Inside the rear area of the seat base, you will find additional packages containing the power supply unit. Cut any plastic ties or tape and remove these items. Set them aside in a safe location.

2

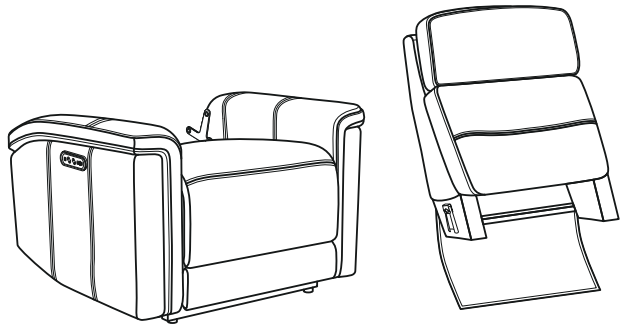

Place all components on a clean, flat surface where you can clearly see them. Check each item carefully for any signs of transport damage, including dents, tears, scratches, bent metal, or broken plastic.

2

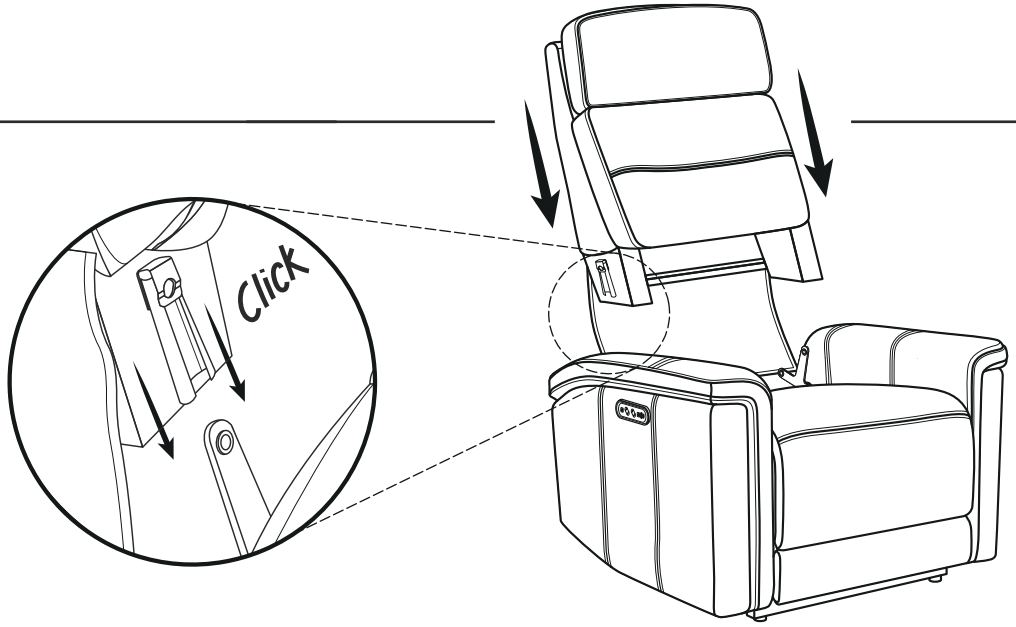

With your assistant holding the backrest securely, lay it face-down on a clean padded surface to protect the upholstery. Identify the metal receiver brackets on the underside of the backrest, these are the two metal slots that will accept the posts on the seat base.
Position the seat base so that its two metal posts are visible and accessible.
Together with your assistant, lift the backrest and hold it directly above the rear of the seat base. Carefully lower the backrest so the metal receivers align with the corresponding metal posts on the seat base. Allow the posts to slide fully into the receivers, you should feel the backrest settle into position.
Press firmly downward on the top of the backrest on both the left and right sides simultaneously. You will hear or feel a distinct **click** on each side when the backrest has locked securely into place. Gently try to lift the backrest away from the base to confirm it is properly locked.

4

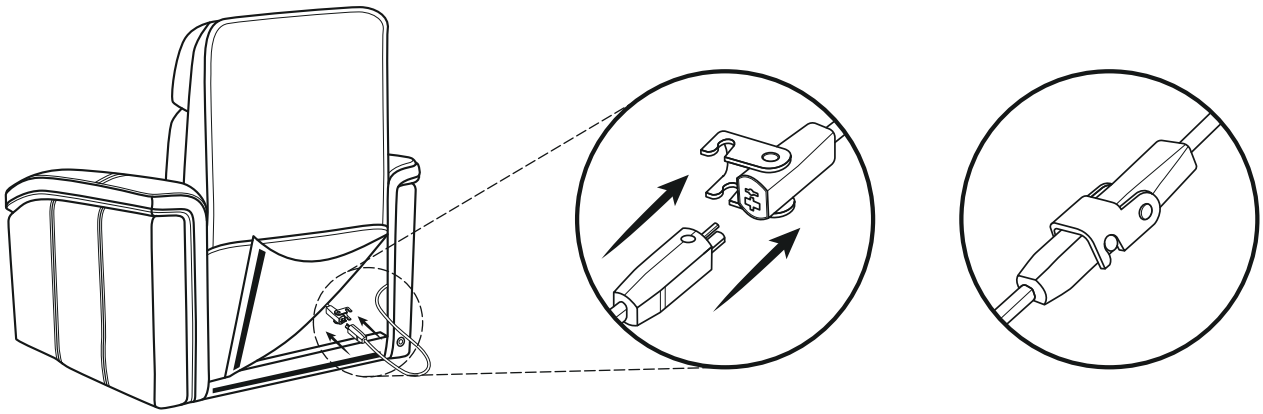

Route the wiring harness from the backrest down towards the power supply connection point at the rear of the seat base. Connect the harness plug to the corresponding socket, these are keyed to ensure correct orientation, so do not force the connection. Press the connectors together firmly until you feel them click or seat fully. Ensure the cable is neatly routed and not kinked, twisted, or trapped beneath the chair frame.

5

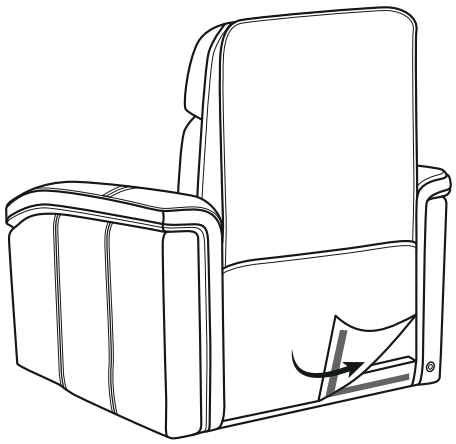

Secure the back flap to the chair base for a clean look.

6

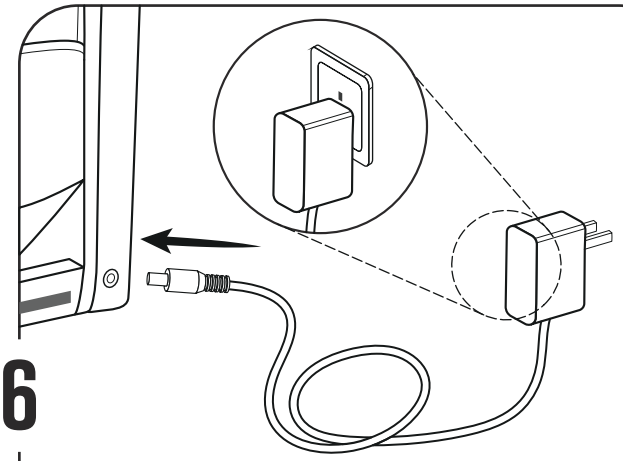

Take the power supply unit and insert the power supply output plug into the socket located at the lower right of the seat base. Do this before plugging the power cord into a wall outlet. Ensure the plug is fully and firmly installed. Then, route the cable away from the chair's moving parts, base, and legs. Plug in into a power outlet. The chair is now ready for initial operation. Test all functions.

WARNING!

Assembly requires two people. Do not attempt to assemble the recliner alone.

Before beginning assembly, clear a sufficient area of floor space. Have both people ready before lifting any heavy components. Follow each step in order and do not skip ahead.

CONTROL PANEL OPERATING INSTRUCTIONS

Glider button
Press to turn on the auto gliding function. Press to cycle through 3 speed settings, or hold for 1.5 seconds to turn off. Auto-off after 30 minutes.

Headrest buttons
Press and hold to adjust the angle of the headrest. Release button when desired position is found

Home button
Press and hold to return the chair to upright sitting position. Use of home button will stop auto-gliding motion

USB Outlets
Used to charge small devices such as smartphones and tablets

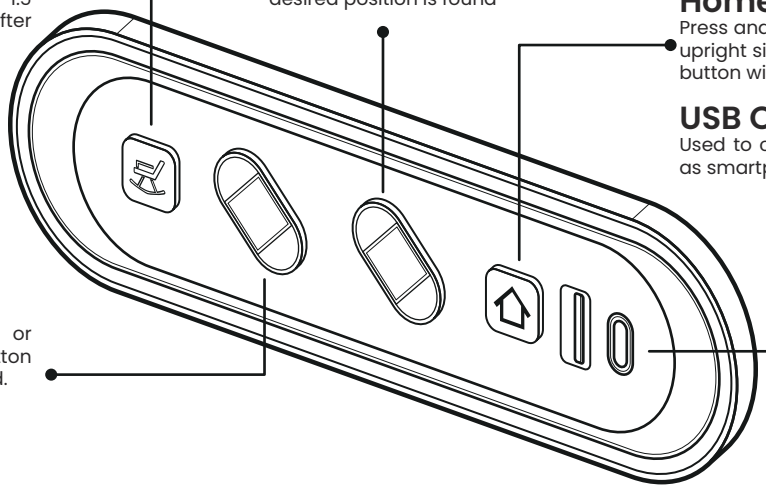

Recline buttons
Press and hold to recline or upright the chair. Release button when desired position is found.

CORRECT AND INCORRECT USE GUIDES

INCORRECT WAY

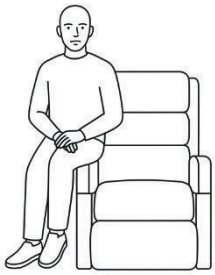

✗ **DO NOT** sit on the backrest.



✗ **DO NOT** distribute excess weight on the armrest.

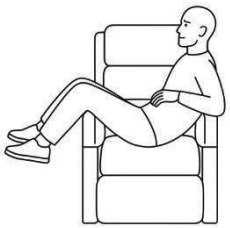

✗ **DO NOT** distribute excess weight on the armrests.

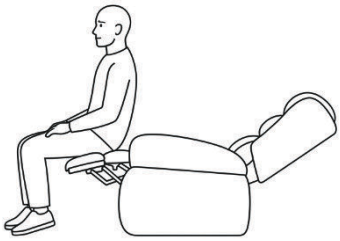

✗ **DO NOT** sit on the footrest when extended.

CORRECT WAY

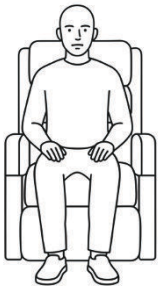

DO sit upright and centrally aligned in the chair.

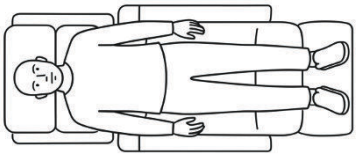

DO lie centrally and flat on the users back.

ROUTINE CLEANING

Frequent vacuuming using an upholstery attachment and light brushing to remove loose dust, pet hair, and grime is the recommended method of day-to-day maintenance. Avoid abrasive brushes or pads.

WARNING!

- Smoking while using this recliner is strongly discouraged. Although this product meets applicable cigarette ignition resistance standards, the following precautions must be observed if you choose to smoke near or while using the recliner:
- Never leave a lit cigarette unattended near the chair.
- Keep ashtrays at a safe distance from the upholstery at all times.
- Ensure all cigarettes are fully and completely extinguished before disposal.

WARNING!

Keep the fabric away from direct contact with any heat source, including space heaters, radiators, and lit cigarettes. Exposure to heat sources may cause permanent fabric damage, personal injury, or fire.

NOTE:

Do not use solvent-based, petroleum-based, or bleach-containing cleaners on the upholstery. Avoid saturating the fabric with liquid of any kind. To prevent fading and UV damage, position the recliner away from direct sunlight and strong artificial UV light sources.

ELECTRONICS CARE

Inspect all visible wiring harnesses, connectors, and the power cord regularly. Look for signs of damage including fraying, cracking, melting, discolouration, or loose connections. If any damage is found, unplug the recliner from the wall outlet immediately and do not use it again until it has been assessed and repaired by an authorised service provider.

Keep all electronic components, including the power supply, control handset, and wiring, free from moisture, liquids, and extreme temperatures. This recliner is designed for indoor use only and should not be exposed to outdoor conditions.

